Entrance Exam

2024

QUESTION PAPER

aglasem.com

ELECTRONIC SCIENCE

1. Calculate the total volume of atoms in an FCC lattice.

(A) $\frac{4}{3}\pi r^3$

(B) $\frac{8}{3}\pi r^3$

(C) $\frac{12}{3}\pi r^3$

(D) $\frac{16}{3}\pi r^3$

2. Calculate the inter-planar spacing of (211) plane of a monoclinic lattice, given lattice constants a = 4.683 Å, b = 3.421 Å, c = 5.129 Å and $\alpha = \beta = \gamma = 90°$.

(A) 6.6 Å
(B) 5.2 Å
(C) 7.9 Å
(D) 4.8 Å

3. Which one of the figures depict the $(1\bar{1}1)$ plane of the cubic lattice?

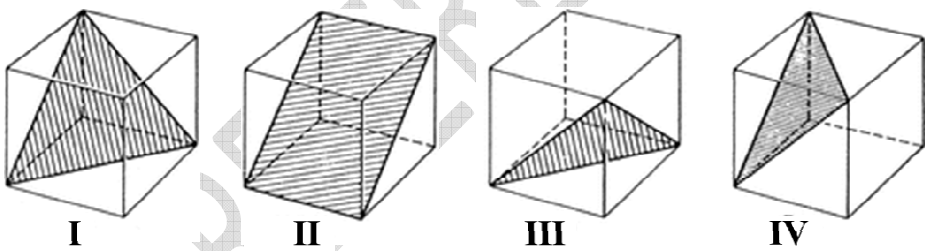

(A) I
(B) II
(C) III
(D) IV

4. Calculate the lattice constant of the cubic cell of a crystal if X-rays of wavelength 0.714 Å are diffracted from the (100) plane at an angle of 30.5° in the second order.

(A) 2.814 Å
(B) 1.407 Å
(C) 2.672 Å
(D) 3.082 Å

FOR REFERENCE ONLY

5. p-type doping of III-V semiconductor GaAs is done by implanting

(A) Si
(B) P
(C) Ga
(D) Ge

6. Arrange the following in increasing order of their resistivity.

(I) SiO_2
(II) Si
(III) ZnO
(IV) Zn

(A) (IV), (III), (II), (I)
(B) (II), (IV), (III), (I)
(C) (II), (III), (IV), (I)
(D) (IV), (II), (III), (I)

7. Determine the ratio of effective mass of electron and hole in an intrinsic semiconductor with band gap $E_g = 0.7$ eV and Fermi level $E_F = 0.3847$ eV.

(A) 0.34
(B) 0.10
(C) 0.16
(D) 0.85

8. Density of states for 2D-confined electrons in a nanowire varies with energy as E^{α}. The value of α is

(A) 2
(B) −0.5
(C) 0.5
(D) 0

9. Identify the group of polar solvents.

(A) Ethanol, Acetic acid, Methanol
(B) Benzene, Chloroform, Acetic acid
(C) Ethanol, Methanol, Benzene
(D) Chloroform, Acetic acid, Ethanol

FOR REFERENCE ONLY

10. Arrange the following materials in increasing order of their band gap.

(A) Ge, Si,GaAs, InP
(B) InP, Ge, GaAs, Si
(C) GaAs, Si, InP, Ge
(D) Ge, Si, InP, GaAs

11. Which one of the following is the expression for Hall coefficient?
(all symbols have their usual meanings)

(A) $\frac{1}{n^2 q}$

(B) $\frac{V_H}{nq}$

(C) $\frac{n_p \mu_p^2 - n_n \mu_n^2}{e\left(n_p \mu_p + n_n \mu_n\right)^2}$

(D) $\frac{BI}{\rho w}$

12. The carrier diffusion coefficient of a non-degenerate semiconductor is given by
(all symbols have their usual meanings)

(A) $\frac{kT\mu}{q}$

(B) $\frac{q\mu}{kT^2}$

(C) $\frac{kT}{q\mu}$

(D) $\frac{\mu}{kT}$

13. A p-n junction with acceptor concentration of 10^{17} cm^{-3} (p-type) and donor concentration of 10^{16} cm^{-3} (n-type). The depletion layer length will be of the order of (Assume $T = 300$ K and $n_i = 10^{10}$ cm^{-3})

(A) 100 nm
(B) 10 nm
(C) 10 μm
(D) 100 μm

FOR REFERENCE ONLY

14. The slope of $\frac{1}{C^2}$ vs. V of a Schottky diode is proportional to

(A) $\frac{1}{N}$

(B) N

(C) N^2

(D) $\frac{1}{N^2}$

15. What is the value of R_S (in Ohms) required to self-bias an N-channel JFET with $V_P = -10$ V, $I_{DSS} = 40$ mA and $V_{GSQ} = -5$ V?

(A) 250
(B) 500
(C) 750
(D) 1500

16. The energy values of surface quantized states in the inversion layer of a MOS capacitor is given by

(A) $E_n \propto n^{1/2}$

(B) $E_n \propto n^2$

(C) $E_n \propto n^{2/3}$

(D) $E_n \propto n^{3/2}$

17. In a reverse biased p-n junction, Zener breakdown is caused by

(A) barrier widening
(B) tunneling
(C) avalanching
(D) capacitance

18. Silicon **cannot** be used to make LED because of

(A) direct band gap
(B) indirect band gap
(C) wide band gap
(D) narrow band gap

FOR REFERENCE ONLY

19. The following occurs in a Schottky diode but **not** in a p-n junction diode

(A) forward current due to minority carriers
(B) strong temperature dependent reverse bias current
(C) high ideality factor (> 1.2) due to recombination in depletion layer
(D) majority carrier transport in forward bias

20. The doping concentration of the emitter (E), base (B) and collector (C) region of a typical BJT varies as

(A) $E > B > C$
(B) $C > B > E$
(C) $E > C > B$
(D) $C > E > B$

21. Which of the following is **not** an ideal metal for ohmic contact with p-Si?

(A) Pt
(B) Ag
(C) Au
(D) Ni

22. The depletion layer width in the metal side of a Schottky barrier

(A) depends on the work function of the metal
(B) depends on the doping concentration of the semiconductor
(C) depends on the applied bias
(D) negligible

23. The I_D vs. V_D graphs of a MOSFET shows saturation due to

(A) pinch off
(B) punch through
(C) mobility decrease
(D) high depletion width

24. The following is **not** true for a FET device.

(A) It is a voltage controlled device
(B) It is bipolar
(C) Has high input impedance
(D) Current conduction by majority carriers

FOR REFERENCE ONLY

25. A Germanium diode has a reverse saturation current of 0.19 μA. Find the current in the diode when it is forward biased with 0.3 V at 27°C.

(A) 1 mA
(B) 11 mA
(C) 21 mA
(D) 31 mA

26. A Si MOS capacitor with a SiO_2 dielectric having thickness of 1 nm is fabricated. In order to have the same capacitance, what will be dielectric thickness required if HfO_2 is used as the insulator?
(Take dielectric constants of SiO_2 and HfO_2 to be 4 and 24, respectively)

(A) 2 nm
(B) 4 nm
(C) 6 nm
(D) 8 nm

27. Given figure shows a Si-transistor employed as a CE mode amplifier. The quiescent collector voltage of the circuit (V_{out}) is approximately.

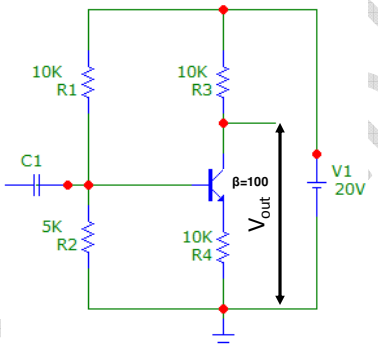

(A) 14 V
(B) 10 V
(C) $\frac{16}{3}$ V
(D) 20 V

28. Which type of BJT configuration has high output impedance but low input impedance?

(A) CB mode
(B) CC mode
(C) CE mode
(D) Both (A) and (C)

FOR REFERENCE ONLY

29. The threshold voltage of an n-channel enhancement mode MOSFET is 0.5 V. When the device is biased at a gate voltage of 3 V, pinch-off would occur at a drain voltage of

(A) 2 V
(B) 2.5 V
(C) 3 V
(D) 3.5 V

30. Which of the following **cannot** be used as a solar cell material?

(A) Si
(B) GaAs
(C) CdS
(D) PbS

31. To detect red light (wavelength 870 nm), the ideal material would be

(A) Si
(B) Ge
(C) InP
(D) GaAs

32. The spectral broadening of a LED is due to

(A) uncertainty principle
(B) temperature
(C) both (A) and (B)
(D) None of the above

33. On decreasing the quantum well width, the emission wavelength of a quantum well LED

(A) decreases
(B) increases
(C) does not change
(D) None of the above

34. For which of the following diodes when the voltage is increased the current flowing through it decreases?

(A) Tunnel diode
(B) Schottky diode
(C) Laser diode
(D) Gunn diode

FOR REFERENCE ONLY

35. Which of the following is a unique property of laser?

(A) Directionality
(B) Speed
(C) Coherence
(D) Wavelength

36. The degenerate source/drain doping of a MOSFET is known as

(A) High density doping
(B) Low density doping
(C) Medium density doping
(D) None of the above

37. A silicon semiconductor slab has absorption coefficient of 10^{12} cm^{-1} at wavelength of 1 μm. If 90% of the incident flux is to be absorbed, then the thickness of the slab required is

(A) 0.23 nm
(B) 0.0105 nm
(C) 0.10 nm
(D) 0.0045 nm

38. The band gap in semiconductor is ΔE = 0.68 eV. Assuming that the number of hole-electron pairs is proportional to $e^{-\Delta E/2kT}$, the percentage increase in the number of charge carriers in pure germanium as the temperature is increased from 300 K to 320 K is

(A) 10%
(B) 27%
(C) 127%
(D) 100%

39. The electron and hole mobilities in Si at room temperature are 0.135 $m^2V^{-1}s^{-1}$ and 0.048 $m^2V^{-1}s^{-1}$ respectively. If the carrier concentration is 1.5×10^{16} m^{-3}, its resistivity at room temperature is

(A) 1.2 Ωm
(B) 2.3 Ωm
(C) 3.5 Ωm
(D) 4.1 Ωm

FOR REFERENCE ONLY

40. The value of Klitzing constant is

(A) 25.8 kΩ
(B) 24.9 kΩ
(C) 26.0 kΩ
(D) 26.2 kΩ

41. The interconnects in an integrated circuit are made during

(A) Lithography process
(B) Epitaxy
(C) Emitter diffusion process
(D) Metallization process

42. Moore's law is related to

(A) power rating of a MOS device
(B) power rating of a bipolar device
(C) integration of MOS device
(D) integration of bipolar device

43. Transconductance of a MOSFET operating in the linear region is approximated by

(A) $K\left(V_{GS}-V_{th}\right)$
(B) $I_D\left(V_{GS}-V_{th}\right)^2$
(C) $I_D/\left(V_{GS}-V_{th}\right)$
(D) KV_{DS}

44. For an n-channel MOSFET, if conduction parameter k_n is 0.249 mA/V^2, gate to source voltage V_{GS} is $2V_{th}$ where V_{th} = 0.75 V. The drain current for large V_{DS} will be

(A) 0.160 mA
(B) 0.150 mA
(C) 0.140 mA
(D) 0.170 mA

FOR REFERENCE ONLY

45. An enhancement type NMOS transistor has V_{th} = 0.7 V. Its source terminal grounded and 1.5 V is applied at the gate. If a drain bias of 0.5 V is applied, what will be the region of operation?

(A) Triode
(B) Saturation
(C) Cut-off region
(D) None of the above

46. Match the following list.

	List 1		**List 2**
(a)	Current gain common base	(i)	1 (unity)
(b)	Input impedance in common base	(ii)	Less than unity
(c)	Voltage gain in common collector	(iii)	Very high
(d)	Output impedance in common base	(iv)	Lowest

(A) (a)-(i), (b)-(ii), (c)-(iii), (d)-(iv)
(B) (a)-(iii), (b)-(i), (c)-(iv), (d)-(ii)
(C) (a)-(iv), (b)-(iii), (c)-(ii), (d)-(i)
(D) (a)-(ii), (b)-(iv), (c)-(i), (d)-(iii)

47. In a BJT switching circuit, the supply voltage V_{CC} is 9 V. The biasing resistors are R_B = 15 kΩ and R_C = 6.8 kΩ. The transistor has an h_{FE} of 25. What will be the minimum input voltage required to operate in saturation mode, given that V_{CE} = 0.2 V?

(A) 1.48 V
(B) 0.78 V
(C) 5 V
(D) 3.3 V

48. Holes are injected at room temperature into a long p-type ($N_A = 10^{17}$ cm^{-3}) Si bar with cross-sectional area of 0.5 cm^2, such that the steady state hole concentration is 10^{17} cm^{-3} at x = 0. What is the separation between the conduction band (E_c) and hole quasi Fermi level (F_p) at x = 50 nm? Take μ_p = 1000 cm^2/(Vs), τ_p = 1 ns and $n_i = 10^{10}$ cm^{-3}.

(A) 1.01 eV
(B) 0.985 eV
(C) 0.90 eV
(D) 0.93 eV

FOR REFERENCE ONLY

49. A n^+ polysilicon gate n-channel MOS transistor is made on a p-type Si substrate with $N_A = 5 \times 10^{15}$ cm^{-3}. The maximum depletion width will be in the range of

(A) 0.6 nm
(B) 0.5 cm
(C) 0.4 µm
(D) 0.3 mm

50. For scaling of MOSFETs according to a constant factor of '*k*', the following quantity does **not** change.

(A) Voltage
(B) Current density
(C) Capacitance
(D) Transconductance

51. CALL 8000H is an instruction of

(A) direct addressing mode
(B) indirect addressing mode
(C) register addressing mode
(D) immediate addressing mode

52. SUB A instruction in 8085 microprocessor

(A) resets the carry flag
(B) sets the zero flag
(C) sets the carry flag
(D) resets the zero flag

53. B, C, D, E, H, L register of 8085 microprocessor are called

(A) Special purpose register
(B) Bit addressable register
(C) General purpose register
(D) Flag register

54. 8086 is a

(A) 8 bit microprocessor
(B) 16 bit microprocessor
(C) 32 bit microprocessor
(D) 64 bit microprocessor

FOR REFERENCE ONLY

55. Maximum memory capacity of 8085 microprocessor is

(A) 1 Kbyte
(B) 1 Mbyte
(C) 4 Kbyte
(D) 64 Kbyte

56. 8085 microprocessor is a

(A) 40 pin IC
(B) 14 pin IC
(C) 8 pin IC
(D) None of the above

57. In 8085 microprocessor, the first machine cycle of every instruction is

(A) I/O machine cycle
(B) Memory read machine cycle
(C) Memory write machine cycle
(D) Opcode fetch machine cycle

58. The function ALE pin is

(A) Multiplex address and data bus
(B) De-multiplex address and data bus
(C) Both (A) and (B)
(D) None of the above

59. Example of data transfer instruction is

(A) LDA 2800_H
(B) LXI 3000_H
(C) MVI B,67_H
(D) All of the above

60. How many flag register present in 8086 microprocessor?

(A) 5
(B) 8
(C) 9
(D) 16

FOR REFERENCE ONLY

61. RRC stands for

(A) Rotate accumulator right without carry
(B) Rotate accumulator left with carry
(C) Rotate accumulator right with carry
(D) Rotate accumulator left without carry

62. Instruction “DAA” stands for

(A) Direct Addressing Accumulator
(B) Decimal Adjust Accumulator
(C) Direct Adjust Accumulator
(D) Decimal Addressing Accumulator

63. Which is used to store critical pieces of data during subroutine and interrupt?

(A) Stack
(B) Queue
(C) Accumulator
(D) Data Register

64. Which is **not** a control bus signal?

(A) Read
(B) Write
(C) Reset
(D) None of the above

65. DMA stands for

(A) Direct Memory Address
(B) Direct Memory Allocation
(C) Data Memory Assess
(D) Data Memory Allocation

66. Ready pin of a microprocessor is used to

(A) introduce wait state
(B) indicate that microprocessor is ready to send output
(C) provide DMA
(D) indicate that microprocessor is ready to receive input

FOR REFERENCE ONLY

67. Which of the following is **not** true about the microprocessor?

(A) Lower order address (A_0-A_7) bus and data bus are multiplex with each other
(B) 8 bit microprocessor
(C) It contains ALU, Stack pointer, program, counter, accumulator and general register
(D) Support pipeline process

68. Which of the following is **not** property of TRAP interrupt?

(A) Non-maskable
(B) Non-vectored
(C) Edge-triggered
(D) Highest priority

69. How many address line present in 8086 microprocessor?

(A) 16
(B) 20
(C) 24
(D) 40

70. The features of microcontroller is

(A) Built-in Internal memory
(B) Bit addressable
(C) Support interrupt
(D) All of the above

71. Any signed negative binary number is recognized by its

(A) MSB
(B) LSB
(C) Byte
(D) Nibble

72. The representation of octal number $(532.2)_8$ in decimal is

(A) $(346.25)_{10}$
(B) $(532.864)_{10}$
(C) $(340.67)_{10}$
(D) $(531.668)_{10}$

FOR REFERENCE ONLY

73. The largest two digit hexadecimal number is

(A) $(FE)_{16}$
(B) $(FD)_{16}$
(C) $(FF)_{16}$
(D) $(EF)_{16}$

74. In boolean algebra, the OR operation is performed by which properties?

(A) Associative properties
(B) Commutative properties
(C) Distributive properties
(D) All of the above

75. DeMorgan's theorem states that

(A) (AB)' = A' + B'
(B) (A + B) ' = A' * B
(C) A' + B' = A'B'
(D) (AB) ' = A' + B

76. The expression Y = (A + B)(B + C)(C + A) shows the …… operation.

(A) AND
(B) POS
(C) SOP
(D) NAND

77. There are …… Minterms for 3 variables (a, b, c).

(A) 0
(B) 2
(C) 8
(D) 1

78. Don't care conditions can be used for simplifying Boolean expressions in

(A) registers
(B) terms
(C) K-maps
(D) latches

FOR REFERENCE ONLY

79. These logic gates are widely used in …… design and therefore are available in IC form.

(A) sampling
(B) digital
(C) analog
(D) systems

80. The code where all successive numbers differ from their preceding number by single bit is

(A) Alphanumeric Code
(B) BCD
(C) Excess 3
(D) Gray

81. The following switching functions are to be implemented using a decoder:
$f1 = \sum m(1, 2, 4, 8, 10, 14)$ $f2 = \sum m(2, 5, 9, 11)$ $f3 = \sum m(2, 4, 5, 6, 7)$

(A) 2 to 4 line
(B) 3 to 8 line
(C) 4 to 16 line
(D) 5 to 32 line

82. A universal logic gate is one which can be used to generate any logic function. Which of the following is a universal logic gate?

(A) OR
(B) AND
(C) XOR
(D) NAND

83. The gates required to build a half adder are

(A) EX-OR gate and NOR gate
(B) EX-OR gate and OR gate
(C) EX-OR gate and AND gate
(D) EX-NOR gate and AND gate

84. Total number of inputs in a half adder is

(A) 3
(B) 2
(C) 4
(D) 1

FOR REFERENCE ONLY

85. In which of the following circuit the output is depending only on present input?

(A) Combinational circuit
(B) Analog circuit
(C) Digital circuit
(D) Sequential circuit

86. An IC with four NOR gate is

(A) 7486
(B) 7404
(C) 7432
(D) 7402

87. …… is an example of a combinational circuit.

(A) Shift register
(B) Multiplexer
(C) Counter
(D) Flip-flop

88. Any Boolean function can be implemented by multiplexer. The statement is

(A) false
(B) true
(C) depends on Boolean function
(D) true for SOP and false for POS expression

89. De multiplexer is used to

(A) add binary numbers
(B) multiply binary numbers
(C) select data from many output line to a single input line
(D) distribute data from one input line to multiple output line

90. A priority encoder is used to

(A) assign priority to different input
(B) convert binary to BCD
(C) combine multiple input into one output
(D) None of the above

FOR REFERENCE ONLY

91. ABCD-to-7 segment decoder is used to

(A) convert gray to binary suitable for 7-segment display
(B) convert binary to gray suitable for 7-segment display
(C) convert Excess-3 to BCD suitable for 7-segment display
(D) convert BCD to a format suitable for 7-segment display

92. When both inputs of a J-K flip-flop is logic high, the output will

(A) set
(B) reset
(C) toggle
(D) undefined

93. Which of the following is correct for a gated D-type flip-flop?

(A) The Q output is either SET (or RESET) as soon as the D input goes HIGH (or LOW)
(B) The output complement follows the input when enabled
(C) Only one of the inputs can be HIGH at a time
(D) The output toggles if one of the inputs is held HIGH

94. The basic latch consists of

(A) two inverters
(B) two comparators
(C) two amplifiers
(D) two adders

95. SISO (serial in serial out) shift register is capable to shift one bit data

(A) in both direction
(B) either right to left or left to right
(C) not shift one bit data
(D) store in memory

96. Three T-flip-flop are connected to form a counter. Maximum state possible for counter will be

(A) 1
(B) 3
(C) 8
(D) 16

FOR REFERENCE ONLY

97. A shift register with its complement output (Q') of the last stage connected to the input of the first stage is called

(A) Twisted –ring counter or Jonson counter
(B) Synchronous counter
(C) Asynchronous counter
(D) Ring counter

98. How to overcome race around condition in J-K flip-flop?

(A) Using Master-Slave flip-flop
(B) Reduce time period of clock less than propagation delay
(C) Using edge trigger clock pulse
(D) All of the above

99. Minimum number of flip flop required for Modulus 15 (MOD-15) counter is

(A) 15
(B) 16
(C) 4
(D) 3

100. Asynchronous counter is not required in ……..

(A) universal clock
(B) flip-flop
(C) state diagram
(D) All of the above

101. What is the duty cycle of the output of an astable multivibrator?

(A) 50%
(B) 100%
(C) 75%
(D) 55%

102. Which of these is **not** a type of monostable multivibrator?

(A) Schimitt trigger as a monostable multivibrator
(B) Emitter coupled as a monostable multivibrator
(C) Using an op-amp
(D) 555 timer as a monostable multivibrator

FOR REFERENCE ONLY

103. What is a square wave generator?

(A) Flip-flop
(B) Bi-stable multivibrator
(C) Astable multivibrator
(D) Monostable multivibrator

104. The transfer function of RC low-pass filter network

(A) $\frac{RCs}{(1 + RCs)}$

(B) $\frac{1}{1 + RCs}$

(C) $\frac{RC}{1 + RCs}$

(D) $\frac{S}{1 + RCs}$

105. If the branch in any network has a current source then the analysis is carried out by

(A) mesh
(B) node
(C) Supermesh
(D) Supernode

106. What will be the output of a K-type thermocouple at 100°C?

(A) 40 mV
(B) 400 mV
(C) 4000 mV
(D) 4 V

107. The output of a dc motor mainly depends on

(A) speed and torque
(B) speed and back emf
(C) speed and applied voltage
(D) speed and load voltage

FOR REFERENCE ONLY

108. An ideal op-amp is used to make an inverting amplifier. The two input terminals are at the same potential because

(A) the two input terminals are directly shorted
(B) the output impedance is infinity
(C) the open loop gain is infinity
(D) CMRR is infinity

109. How many inductors are there in the tank circuit?

(A) 1
(B) 2
(C) 3
(D) 4

110. Active element in the Colpitts oscillator is

(A) Cell
(B) Voltage
(C) Diode
(D) Transistor

111. Which type feedback is used in Colpitts oscillator?

(A) Voltage series feedback
(B) Current series feedback
(C) Voltage shunt feedback
(D) Current shunt feedback

112. Which of the following are **not** the characteristics of the crystal oscillator?

(A) Highly stable with time
(B) Highly stable with temperature
(C) Highly selective
(D) Frequency depends on external resistors and capacitors

113. The inductance in the equivalent circuit of crystal oscillator represents

(A) Interelectrode capacitance
(B) Compliance
(C) Viscous factor
(D) Mass

FOR REFERENCE ONLY

114. Emission coefficient of germanium is

(A) 1
(B) 1.1
(C) 1.5
(D) 2

115. When the temperature increases, reverse saturation current

(A) increases
(B) decreases
(C) does not depend on temperature
(D) either increase or decrease

116. Voltage drop produced by a diode at forward bias in ideal diode model is equal to

(A) 0.7 V
(B) 0.3 V
(C) 1.0 V
(D) 0 V

117. In ideal diode model in forward bias is considered as

(A) resistor
(B) perfect conductor
(C) perfect insulator
(D) capacitor

118. Active device can also be used as

(A) Amplifiers
(B) Chopper
(C) Convertor
(D) Invertor

119. The unit of gain is

(A) Joules
(B) Decibels
(C) Unitless
(D) Watts

FOR REFERENCE ONLY

120. Diffusion capacitance is larger than transition capacitance

(A) True
(B) False
(C) Both are same
(D) Depends on doping

121. Diffusion capacitance does **not** depend on

(A) Dynamic conductance
(B) Forward current
(C) Doping concentration
(D) Reverse resistance

122. What is IC 723?

(A) A voltage regulator
(B) A full wave rectifier
(C) A half wave rectifier
(D) A clipper

123. In IC 7805, the minimum input voltage for proper functioning is …….

(A) 5 V
(B) 6 V
(C) 7 V
(D) 9 V

124. The current flowing into one input of the op-amp is 12 nA and it is 10 nA in the other. Find the input offset current.

(A) 1 nA
(B) 2 nA
(C) –2 nA
(D) 11 nA

125. Which of the following statement is TRUE about op–amp ?

(A) In op-amp a level shifter has high input resistance which prevents loading effect on the intermediate stage.
(B) In op-amp a level shifter has low input resistance which prevents loading effect on the intermediate stage.
(C) Level shifter is a circuit which can shift DC voltage level of a signal to very high voltage
(D) All statements given above are false

FOR REFERENCE ONLY

126. In an operational amplifier (op-amp), what does the term "common-mode rejection ratio (CMRR)" measure?

(A) The differential gain of the op-amp
(B) The ability to reject common-mode signals
(C) The bandwidth of the op-amp
(D) The input impedance of the op-amp

127. What is the primary advantage of a differential amplifier compared to a single-ended amplifier?

(A) Higher input impedance
(B) Higher voltage gain
(C) Better common-mode rejection
(D) Lower power consumption

128. What is the function of a diode limiter in analog electronics?

(A) Generate a fixed voltage reference
(B) Limit the amplitude of input signals
(C) Provide negative feedback
(D) Amplify signals

129. What is the purpose of using negative feedback in amplifier circuits?

(A) Increase distortion
(B) Decrease bandwidth
(C) Improve stability and linearity
(D) Increase noise

130. Which of the following devices can be used as a voltage-controlled resistor in analog circuits?

(A) Bipolar Junction Transistor (BJT)
(B) Field-Effect Transistor (FET)
(C) Operational Amplifier (Op-Amp)
(D) Zener Diode

131. What is the primary function of a phase-locked loop (PLL) in analog electronics?

(A) Frequency modulation
(B) Voltage regulation
(C) Frequency synthesis and synchronization
(D) Signal rectification

FOR REFERENCE ONLY

132. What does the term "bandwidth" refer to in the context of analog filters?

(A) The range of frequencies passed by the filter
(B) The attenuation of frequencies outside the pass band
(C) The phase shift introduced by the filter
(D) The impedance mismatch between input and output

133. Which type of filter exhibits a constant gain within its pass band and a steep roll-off beyond the cutoff frequency?

(A) Butterworth filter
(B) Chebyshev filter
(C) Bessel filter
(D) Elliptic filter

134. What is the function of an integrator circuit in analog electronics?

(A) Amplify signals
(B) Colpitts oscillator
(C) Generate square waves
(D) Perform mathematical integration of input signals

135. Which type of oscillator circuit utilizes a tuned LC tank circuit for frequency generation?

(A) Wien bridge oscillator
(B) Differentiate signals
(C) Hartley oscillator
(D) Phase-shift oscillator

136. What is the primary purpose of using a Schmitt trigger in analog circuits?

(A) Generate triangular waveforms
(B) Provide hysteresis and noise immunity
(C) Amplify signals
(D) Generate square waves

137. Which type of modulation is commonly used for transmitting analog signals over long distances?

(A) Amplitude Modulation (AM)
(B) Frequency Modulation (FM)
(C) Phase Modulation (PM)
(D) Pulse Width Modulation (PWM)

FOR REFERENCE ONLY

138. What is the purpose of a sample-and-hold circuit in analog signal processing?

(A) Amplify signals
(B) Store and maintain the value of a signal
(C) Convert analog signals to digital
(D) Filter out high-frequency noise

139. What is the significance of the "linearity" of an amplifier in analog electronics?

(A) Ability to reject common-mode signals
(B) Ability to produce distortion-free output
(C) Ability to operate at high frequencies
(D) Ability to handle large signal swings

140. In an active filter circuit, what role does the operational amplifier play?

(A) Provide frequency-dependent feedback
(B) Amplify the input signal
(C) Introduce non-linearity
(D) Provide power supply regulation

141. Which technique is used to study crystalline nature of material?

(A) AFM
(B) XPS
(C) XRD
(D) EDAX

142. A signal may have frequency components ranging from 0.001 Hz to 10 Hz. Which of the following types of coupling should be chosen in a multi stage amplifier designed to amplify this signal?

(A) RC coupling
(B) Direct coupling
(C) Transformer coupling
(D) Double tuned coupling

143. Which of the following parameters characterizes the dynamic behavior of an operational amplifier?

(A) Input offset voltage
(B) Input bias current
(C) Slew rate
(D) Common-mode rejection ratio

FOR REFERENCE ONLY

144. What is the primary purpose of using a cascode amplifier configuration?

(A) Higher input impedance
(B) Higher voltage gain
(C) Better power efficiency
(D) Improved frequency response

145. What is the primary function of a Wien bridge oscillator in analog circuits?

(A) Generate sinusoidal waveforms
(B) Perform phase modulation
(C) Provide frequency modulation
(D) Convert digital signals to analog

146. Which type of feedback configuration is commonly used to stabilize the gain of an operational amplifier?

(A) Series feedback
(B) Parallel feedback
(C) Positive feedback
(D) Negative feedback

147. Photo current in p-n junction solar cell is at

(A) 1st quadrant
(B) 2nd quadrant
(C) 3rd quadrant
(D) 4th quadrant

148. The depth of penetration of a wave in a lossy dielectric increases with increasing……

(A) Wavelength
(B) Permeability
(C) Conductivity
(D) Permittivity

149. A transmission line whose characteristic impedance is a resistance

(A) must be a distortionless line
(B) may not be a distortionless line
(C) must be a lossless line
(D) may not be a lossless line

FOR REFERENCE ONLY

150. What is the primary purpose of using a precision rectifier circuit in analog electronics?

(A) Amplify AC signals
(B) Convert AC signals to DC
(C) Convert digital signals to analog
(D) Perform frequency modulation

FOR REFERENCE ONLY

ANSWER KEY

Subject Name: 606 ELECTRONICS

SI No.	Key	SI No.	Key	SI No.	Key	SI No.	Key	SI No.	Key
1	D	31	D	61	A	91	D	121	D
2	A	32	C	62	B	92	A	122	A
3	D	33	A	63	A	93	A	123	C
4	B	34	D	64	C	94	A	124	B
5	A	35	C	65	A	95	B	125	A
6	D	36	A	66	A	96	C	126	B
7	C	37	A	67	D	97	A	127	C
8	B	38	C	68	B	98	D	128	B
9	A	39	B	69	B	99	C	129	C
10	D	40	A	70	D	100	A	130	B
11	C	41	D	71	A	101	A	131	C
12	A	42	C	72	A	102	A	132	A
13	A	43	D	73	C	103	C	133	A
14	A	44	C	74	D	104	B	134	D
15	B	45	A	75	A	105	B	135	C
16	C	46	D	76	B	106	C	136	B
17	C	47	A	77	C	107	A	137	A
18	B	48	B	78	C	108	C	138	B
19	D	49	C	79	B	109	A	139	B
20	C	50	D	80	D	110	D	140	A
21	B	51	A	81	C	111	A	141	C
22	D	52	B	82	D	112	D	142	B
23	A	53	C	83	C	113	D	143	C
24	B	54	B	84	A	114	A	144	D
25	C	55	D	85	A	115	A	145	A
26	C	56	A	86	D	116	D	146	D
27	A	57	D	87	B	117	B	147	D
28	A	58	B	88	B	118	A	148	A
29	B	59	D	89	D	119	C	149	C
30	D	60	C	90	A	120	B	150	B

FOR REFERENCE ONLY

Entrance Exams

- Agricultural Entrance Exams
- Architecture Entrance Exam
- Arts and Humanities Entrance Exams
- Commerce Entrance Examinations
- Common Entrance Examinations
- Computer Application Entrance Exams
- Design Entrance Exams
- Education Entrance Exams
- Engineering Entrance Exams
- Hotel Management Entrance Exams
- Law Entrance Exams
- MBA Entrance Exams
- Media & Journalism Entrance Exams
- Medical Entrance Exams
- Nursing Entrance Exams
- Pharmacy Entrance Exams
- Science Entrance Exams
- Diploma & Polytechnic
- Lateral Entry