aglasem.com

FOR JNUEE EXAM PREPARATION

JNUEE 2022 Question Paper · Ph.D Physical Sciences

EXAM	YEAR	TYPE	SUBJECT
JNUEE	2022	Question Paper	Ph.D Physical Sciences

राष्ट्रीय परीक्षा एजेंसी
National Testing Agency
Excellence in Assessment

Test Date : 08 Dec 2022 **Test Slot : Slot 1**

Subject : PHYH-Physical Sciences

Sl. No.1
QBID:8982001

The Fourier transform of the function $f(x)$ given by $f(x)=\begin{cases}1-x^2 & if\ |x|\le 1\\ 0 & if\ |x|>1\end{cases}$ is

(1) $\frac{1}{\sqrt{2\pi}}\frac{4}{s^3}[-s\sin s+\cos s]$

(2) $\frac{1}{\sqrt{2\pi}}\frac{4}{s^3}[-s\cos s+\sin s]$

(3) $\frac{1}{\sqrt{2\pi}}\frac{4}{s^3}[-\sin s+\cos s]$

(4) $\frac{1}{\sqrt{2\pi}}\frac{4}{s^3}[\sin s]$

(1) 1
(2) 2
(3) 3
(4) 4

1[Option ID=8001]
2[Option ID=8002]
3[Option ID=8003]
4[Option ID=8004]

Sl. No.2
QBID:8982002

The residue of $F(z)=\frac{\cot z\coth z}{z^3}$ at $z=0$ is

(1) $7/45$

(2) $8/45$

(3) $-7/45$

(4) $7/55$

(1) 1
(2) 2
(3) 3
(4) 4

1[Option ID=8005]
2[Option ID=8006]
3[Option ID=8007]
4[Option ID=8008]

Sl. No.3
QBID:8982003

The Laplace transform of $\cos^2(2t)$ is

(1) $\frac{1}{3}\left(\frac{1}{s}+\frac{s}{s^2+16}\right)$

(2) $\frac{1}{2}\left(\frac{1}{s}+\frac{s}{s^2+16}\right)$

(3) $\frac{1}{4}\left(\frac{1}{s}+\frac{s}{s^2+15}\right)$

(4) $\frac{1}{2}\left(\frac{1}{s^2}+\frac{s}{s^2+16}\right)$

(1) 1

(2) 2

(3) 3

(4) 4

1[Option ID=8009]
2[Option ID=8010]
3[Option ID=8011]
4[Option ID=8012]

Sl. No.4
QBID:8982004

The eigen values of $A=\begin{pmatrix}3 & 1\\ 2 & 2\end{pmatrix}$ are :

(1) 1 and 2 (2) 2 and 4

(3) 3 and 4 (4) 1 and 4

(1) 1

(2) 2

(3) 3

(4) 4

1[Option ID=8013]
2[Option ID=8014]
3[Option ID=8015]
4[Option ID=8016]

Sl. No.5
QBID:8982005

The eigen values of a Hermitian matrix are :

(1) Real (2) Imaginary

(3) Complex (4) Zero

(1) 1

(2) 2

(3) 3

(4) 4

1[Option ID=8017]
2[Option ID=8018]
3[Option ID=8019]
4[Option ID=8020]

Sl. No.6
QBID:8982006

The value of the integral $\int_C \frac{z^2-z+1}{z-1}\,dz$, where C is the circle $|z|=\frac{1}{2}$ is

(1) -1 (2) $+1$

(3) 0 (4) $\frac{1}{2}$

(1) 1

(2) 2

(3) 3

(4) 4

1[Option ID=8021]
2[Option ID=8022]
3[Option ID=8023]
4[Option ID=8024]

Sl. No.7
QBID:8982007

The gradient of $r=\sqrt{x^2+y^2+z^2}$ is given by

(1) $\hat{r}$ (2) $\vec{r}$

(3) $\vec{r}^2$ (4) $\vec{r}^3$

(1) 1

(2) 2

(3) 3

(4) 4

1[Option ID=8025]
2[Option ID=8026]
3[Option ID=8027]
4[Option ID=8028]

Sl. No.8
QBID:8982008

The value of the integral $\int_C \bar{z}\,dz$ from $z=0$ to $z=4+2i$ along the curve C given by $z=t^2+it$ is

(1) $10-\frac{8i}{3}$ (2) $10+\frac{8i}{3}$

(3) $-10-\frac{8i}{3}$ (4) $10i-\frac{8}{3}$

(1) 1

(2) 2

(3) 3

(4) 4

1[Option ID=8029]
2[Option ID=8030]
3[Option ID=8031]
4[Option ID=8032]

Sl. No.9
QBID:8982009

Given that $\Gamma\left(\frac{1}{2}\right)=\sqrt{2}$, the value of Bessel functions $J_{1/2}(x)$ will be

(1) $\sqrt{\frac{2}{\pi x}}\sin x$ (2) $\sqrt{\frac{2}{\pi x}}\cos x$

(3) $\sqrt{\frac{\pi}{2x}}\sin x$ (4) $\sqrt{\frac{2\pi}{x}\cos x}$

(1) 1

(2) 2

(3) 3

(4) 4

1[Option ID=8033]
2[Option ID=8034]
3[Option ID=8035]
4[Option ID=8036]

Sl. No.10
QBID:8982010

The coefficient of e^{ikx} in the Fourier expansion of $U(x)=A\sin^2(\alpha x)$, for $K=-2\alpha$ is

(1) $\frac{A}{4}$ (2) $-\frac{A}{4}$

(3) $\frac{A}{2}$ (4) $-\frac{A}{2}$

(1) 1

(2) 2

(3) 3

(4) 4

1[Option ID=8037]
2[Option ID=8038]
3[Option ID=8039]
4[Option ID=8040]

Sl. No.11
QBID:8982011

The solution of Fourier integral $\int_0^\infty \frac{\cos ax}{1+a^2}\,dx$ will be

(1) $2\pi e^{-2x}$ (2) $\frac{\pi}{2}e^{-x}$

(3) $\frac{\pi}{2}e^{-x^2}$ (4) $2\pi e^{-x^2}$

(1) 1

(2) 2

(3) 3

(4) 4

1[Option ID=8041]
2[Option ID=8042]
3[Option ID=8043]
4[Option ID=8044]

Sl. No.12
QBID:8982012

The mean density of the material of earth is 5 gm/cc. What is the Earth's potential if the radius of Earth is 6.1×10^8 cm and universal gravitational constant is 6.6×10^{-6} cgs units?

(1) -27.35×10^{-27} erg/gm (2) -51.41×10^{14} erg/gm

(3) -42.55×10^{30} erg/gm (4) -29.22×10^{-15} erg/gm

(1) 1

(2) 2

(3) 3

(4) 4

1[Option ID=8045]
2[Option ID=8046]
3[Option ID=8047]
4[Option ID=8048]

Sl. No.13
QBID:8982013

A particle ρ of mass m can slide freely along a long straight wire. ρ is connected to a fixed pint A, which is at a distance 4a from the wire, by a light elastic cord of natural length 3a and strength α. The approximate period of small oscillations of ρ about its equilibrium position will be

(1) $T=4\pi(\alpha/m)^{1/2}$

(2) $T=4\pi(m/\alpha)^{1/2}$

(3) $T=2\pi(\alpha/m)^{1/2}$

(4) $T=2\pi(m/\alpha)^{1/2}$

(1) 1

(2) 2

(3) 3

(4) 4

1[Option ID=8049]
2[Option ID=8050]
3[Option ID=8051]
4[Option ID=8052]

Sl. No.14
QBID:8982014

A particle of charge q, mass m, and linear momentum $\vec{p}$ enters in an electromagnetic field of vector potential $\vec{A}$ and scalar potential ϕ. The Hamiltonian of the particle is

(1) $\frac{1}{2m}(\vec{p}-q\vec{A})^2+2\phi$

(2) $\frac{p^2}{2m}+\frac{A^2}{2m}+q\phi$

(3) $\frac{1}{2m}\left(\vec{p}-\frac{q}{C}\vec{A}\right)^2+\vec{P}.\vec{A}$

(4) $\frac{p^2}{2m}q\phi-\vec{P}.\vec{A}$

(1) 1

(2) 2

(3) 3

(4) 4

1[Option ID=8053]
2[Option ID=8054]
3[Option ID=8055]
4[Option ID=8056]

Sl. No.15
QBID:8982015

A block of mass 2 kg is suspended from a fixed support by a spring of strength 2000 Nm^{-1}. The block is subjected to the vertical driving force $36 \cos wt$ N. Given that the spring will yield if its extension exceeds 4 cm, what will be the range of frequencies that can safely be applied (take $g = 10\ ms^{-2}$)?

(1) $60\,rad\,s^{-1} < w < 30\,rad\,s^{-1}$

(2) $100\ rad\ s^{-1} < w < 50\,rad\,s^{-1}$

(3) $40\,rad\,s^{-1} < w < 20\,rad\,s^{-1}$

(4) $5\,rad\,s^{-1} < w < 10\,rad\,s^{-1}$

(1) 1

(2) 2

(3) 3

(4) 4

1[Option ID=8057]
2[Option ID=8058]
3[Option ID=8059]
4[Option ID=8060]

Sl. No.16
QBID:8982016

In a system, a_j are generalized co-ordinates, $T(q_j, \dot{q}_j)$ is the kinetic energy, and $V(q_j)$ is the potential energy. Lagrange's equation for the system are given by

(1) $\frac{d}{dt}\left(\frac{\partial T}{\partial \dot{q}_j}\right) - \frac{\partial T}{\partial q_j} = Q_j\ (1 \le j \le n)$

(2) $\frac{d}{dt}\left(\frac{\partial T}{\partial \dot{q}_j}\right) - \frac{\partial T}{\partial q_j} = -\frac{\partial V}{\partial q_j}\ (1 \le j \le n)$

(3) $\frac{d}{dt}\left(\frac{\partial T}{\partial q_j}\right) - \frac{\partial T}{\partial \dot{q}_j} = 0\ (1 \le J \le n)$

(4) $\frac{d}{dt}\left(\frac{\partial T}{\partial q_j}\right) - \frac{\partial T}{\partial q_j} = -\frac{\partial V}{\partial q_j}\ (1 \le J \le n)$

(1) 1

(2) 2

(3) 3

(4) 4

1[Option ID=8061]
2[Option ID=8062]
3[Option ID=8063]
4[Option ID=8064]

Sl. No.17
QBID:8982017

The carbon monoxide (CO) molecule has a bond length R of 0.113 nm and the masses of the ^{12}C and ^{16}O atoms are respectively 1.99×10^{-26} kg and 2.66×10^{-26} kg. The angular velocity of the CO molecule in its lowest rotational state is

(1) 4.25×10^{9} rad/s

(2) 3.23×10^{11} rad/s

(3) 3.52×10^{7} rad/s

(4) 4.11×10^{10} rad/s

(1) 1

(2) 2

(3) 3

(4) 4

1[Option ID=8065]
2[Option ID=8066]

3[Option ID=8067]
4[Option ID=8068]

Sl. No.18
QBID:8982018

A spacecraft A is moving at 0.9c with respect to the earth. If spacecraft B is to pass A at a relative speed of 0.5c in the same direction, what speed must B have with respect to the earth?

(1) 0.55c (2) 0.62c
(3) 0.85c (4) 0.97c

(1) 1
(2) 2
(3) 3
(4) 4

1[Option ID=8069]
2[Option ID=8070]
3[Option ID=8071]
4[Option ID=8072]

Sl. No.19
QBID:8982019

A particle of mass m moves in a central force field defined by $\vec{F}=-\frac{k\vec{r}}{r^4}$ (where K is a constant). If E is the total energy supplied to the particle then its speed will be

(1) $V=\sqrt{\frac{K}{mr^2}+\frac{2E}{m}}$ (2) $V=\sqrt{\frac{Km}{r^2}+\frac{2m}{E}}$
(3) $V=\sqrt{\frac{K}{2mr^2}+\frac{E}{2m}}$ (4) $V=\sqrt{\frac{2k}{mr^2}+\frac{m}{2E}}$

(1) 1
(2) 2
(3) 3
(4) 4

1[Option ID=8073]
2[Option ID=8074]
3[Option ID=8075]
4[Option ID=8076]

Sl. No.20
QBID:8982020

The extremal of the functional $J[x]=\int_1^2 \frac{\dot{x}^2}{t^3}\,dt$ that satisfies $x(1)=3$ and $x(2)=18$ is

(1) $x=t^3+4$ (2) $x=t^4+2$
(3) $x=3t^2+1$ (4) $x=4t^3+3$

(1) 1
(2) 2
(3) 3
(4) 4

1[Option ID=8077]
2[Option ID=8078]

3[Option ID=8079]
4[Option ID=8080]

Sl. No.21
QBID:8982021

Given that σ and δ represent surface charge density and Dirac delta function respectively, the volume charge density of a charged spherical shell of radius R can be written as

(1) $\rho(\bar{r})=\delta(R-r)$
(2) $\rho(\bar{r})=\sigma\delta(R-r)$
(3) $\rho(\bar{r})=\sigma/\delta(R)$
(4) $\rho(\bar{r})=0$

(1) 1
(2) 2
(3) 3
(4) 4

1[Option ID=8081]
2[Option ID=8082]
3[Option ID=8083]
4[Option ID=8084]

Sl. No.22
QBID:8982022

With $\bar{A}$ and ϕ representing vector potential and scalar potential respectively, the Coulomb gauge is given by

(1) $\nabla^2 \bar{A}=0$
(2) $\bar{\nabla}.\bar{A}=0$
(3) $\bar{\nabla}.\bar{A}=-\mu_0\epsilon_0\frac{\partial\phi}{\partial t}$
(4) $\bar{\nabla}\phi=0$

(1) 1
(2) 2
(3) 3
(4) 4

1[Option ID=8085]
2[Option ID=8086]
3[Option ID=8087]
4[Option ID=8088]

Sl. No.23
QBID:8982023

The Brewster's angle for light incident on glass (of refractive index 1.732) from air is

(1) 45°
(2) 60°
(3) 30°
(4) 90°

(1) 1
(2) 2
(3) 3
(4) 4

1[Option ID=8089]
2[Option ID=8090]
3[Option ID=8091]
4[Option ID=8092]

Sl. No.24
QBID:8982024

When the gauge function $\lambda = \frac{1}{4\pi\epsilon_0}\left(\frac{qt}{r}\right)$ is used on a given set of potentials $\phi(\bar{r}, t) = 0$ and $\bar{A}(\bar{r}, t) = -\frac{1}{4\pi\epsilon_0}\frac{qt}{r^2}\hat{r}$, the new transformed potentials are

(1) $\phi'(\bar{r}, t) = \frac{1}{4\pi\epsilon_0}\frac{q}{r}$, $\bar{A}'(\bar{r}, t) = 0$

(2) $\phi'(\bar{r}, t) = 0$, $\bar{A}'(\bar{r}, t) = \frac{1}{4\pi\epsilon_0}\frac{q}{r}$

(3) $\phi'(\bar{r}, t) = 0$, $A'(\bar{r}, t) = 0$

(4) $\phi'(\bar{r}, t) = q/r^2$, $A'(\bar{r}, t) = 0$

(1) 1

(2) 2

(3) 3

(4) 4

1[Option ID=8093]
2[Option ID=8094]
3[Option ID=8095]
4[Option ID=8096]

Sl. No.25
QBID:8982025

A metal sphere of radius 'a' is surrounded by dielectric material of permittivity ϵ upto radius 'b' $(b > a)$. The sphere carries free charge Q. The electric potential (ϕ) at the center is

(1) $\phi = 0$

(2) $\phi = \frac{Q}{4\pi}\left(\frac{1}{\epsilon_0 b} + \frac{1}{\epsilon a} - \frac{1}{\epsilon b}\right)$

(3) $\phi = \frac{Q}{4\pi\epsilon_0 b}$

(4) $\phi = \frac{Q}{4\pi}\left(\frac{1}{\epsilon b} + \frac{1}{\epsilon a}\right)$

(1) 1

(2) 2

(3) 3

(4) 4

1[Option ID=8097]
2[Option ID=8098]
3[Option ID=8099]
4[Option ID=8100]

Sl. No.26
QBID:8982026

When the volume charge density is time dependent, the Poisson equation is arrived at under

(1) Coulomb gauge

(2) Lorentz gauge

(3) Both Coulomb and Lorentz gauge

(4) Neither Couloms nor Lorentz gange

(1) 1

(2) 2

(3) 3

(4) 4

1[Option ID=8101]
2[Option ID=8102]
3[Option ID=8103]
4[Option ID=8104]

Sl. No.27
QBID:8982027

A charge parallel plate capacitor with uniform electric field $\overline{E} = E\hat{x}$ is placed in a uniform magnetic field $\overline{B} = B\hat{y}$. The electromagnetic momentum density in the space between the plates of the capacity is given by

(1) $\frac{1}{\mu_0} E B \hat{y}$

(2) $\epsilon_0 E B \hat{z}$

(3) $\frac{B^2}{2\mu_0}$

(4) $\frac{1}{2}\epsilon_0 E^2$

(1) 1

(2) 2

(3) 3

(4) 4

1[Option ID=8105]
2[Option ID=8106]
3[Option ID=8107]
4[Option ID=8108]

Sl. No.28
QBID:8982028

A uniform magnetic field $\overline{B}(t)$ fills the shaded region inside a circular wire loop. If $\overline{B}$ is increasing with time, the induced current in the wire loop, as viewed from above

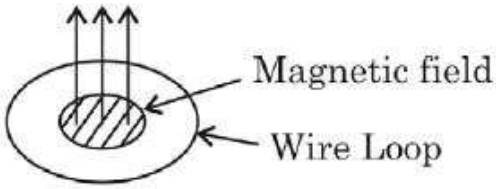

(1) Is zero

(2) Runs clockwise

(3) Runs anti-clockwise

(4) Cannot be deduced from the given data

(1) 1

(2) 2

(3) 3

(4) 4

1[Option ID=8109]
2[Option ID=8110]
3[Option ID=8111]
4[Option ID=8112]

Sl. No.29
QBID:8982029

A hollow spherical shell carries charge density $\rho = \frac{k}{r^2}$ with k being a constant and a, b are inner and outer radius of the shell. The electric field in the region $r \geq b$ is given by

(1) $\frac{k}{\epsilon_0}\left(\frac{b-a}{r^2}\right)\hat{r}$

(2) $\frac{k}{\epsilon_0}\left(\frac{1}{r^2}\right)\hat{r}$

(3) $\frac{k}{\epsilon_0}\left(\frac{r-b}{r^2}\right)\hat{r}$

(4) 0

(1) 1

(2) 2

(3) 3

(4) 4

1[Option ID=8113]
2[Option ID=8114]
3[Option ID=8115]
4[Option ID=8116]

Sl. No.30
QBID:8982030

The gradient of scalar function $\left(\frac{1}{\tau}\right)$, with $\bar{\tau}$ being the separation vector between the field point and source point $(\bar{\tau} \equiv \bar{r} - \bar{r}')$, is given by

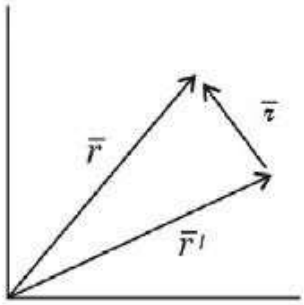

(1) $-\frac{\hat{\tau}}{\tau^2}$ (2) 0

(3) 4π (4) $\frac{\hat{\tau}}{\tau^3}$

(1) 1

(2) 2

(3) 3

(4) 4

1[Option ID=8117]
2[Option ID=8118]
3[Option ID=8119]
4[Option ID=8120]

Sl. No.31
QBID:8982031

Consider a quantum harmonic oscillator with frequency w in two dimensions. The degeneracy of the level with energy $E = 3\hbar w$ is

(1) 8 (2) 6

(3) 4 (4) 3

(1) 1

(2) 2

(3) 3

(4) 4

1[Option ID=8121]
2[Option ID=8122]
3[Option ID=8123]
4[Option ID=8124]

Sl. No.32
QBID:8982032

A beam of electrons of energy $E<V_0$ hits a square barrier of height V_0 and width d. The reflection probability is P. Which of the following statements is correct?

(1) P increases with increase in both V_0 and d

(2) P increases with increase in V_0 and decrease in d

(3) P increases with decrease in V_0 and increase in d

(4) P increases with decrease in both V_0 and d

(1) 1

(2) 2

(3) 3

(4) 4

1[Option ID=8125]
2[Option ID=8126]
3[Option ID=8127]
4[Option ID=8128]

Sl. No.33
QBID:8982033

In a hydrogen atom, the potential is $V(r)\sim -1/r$ where r is the radial distance. The electron wave-function can be written as $\psi(r, \theta, \phi) = R(r)\ Y(\theta, \phi)$. The potential is changed to $V(r)\sim -1/r^4$. Which of the following is correct?

(1) The average distance of the electron $\langle r \rangle$ decreases

(2) $\langle r \rangle$ increases

(3) $\langle r \rangle$ is unchanged

(4) The electron becomes a free particle

(1) 1

(2) 2

(3) 3

(4) 4

1[Option ID=8129]
2[Option ID=8130]
3[Option ID=8131]
4[Option ID=8132]

Sl. No.34
QBID:8982034

The wave-function of a 1-dimensional harmonic oscillator in the ground state $(n=0)$ is $\psi(x)=\frac{1}{\pi^{1/4}}\ e^{-x^2/2}$. The value of $\langle x^3 \rangle$ is

(1) $1/2$ (2) $-1/2$

(3) 0 (4) 1/4

(1) 1

(2) 2

(3) 3

(4) 4

1[Option ID=8133]
2[Option ID=8134]
3[Option ID=8135]
4[Option ID=8136]

Sl. No.35
QBID:8982035

A magnetic particle is placed in a magnetic field $h\hat{z}$. The energy is $-\mu_B h\cos\theta$, where θ is the angle made with the +z-direction. The particle has two quantum states. "up" with $\theta=0$, and "down" with $\theta=180^\circ$. The probability of being in the up state at temperature $T\left[\beta=(k_B T)^{-1}\right]$ is

(1) $1/2$

(2) $\dfrac{e^{\beta\mu_B h}}{e^{\beta\mu_B h}+e^{-\beta\mu_B h}}$

(3) $\dfrac{e^{-\beta\mu_B h}}{e^{\beta\mu_B h}+e^{-\beta\mu_B h}}$

(4) 1

(1) 1
(2) 2
(3) 3
(4) 4

1[Option ID=8137]
2[Option ID=8138]
3[Option ID=8139]
4[Option ID=8140]

Sl. No.36
QBID:8982036

A particle is confined in a one-dimensional box of length L. Its wave function is $\psi(x)=C\sin\left(\dfrac{\pi x}{L}\right)$ in the region $0<x<L$ and $\psi(x)=0$ outside this region. The average value of x^2 is

(1) $L^2\left(\dfrac{1}{2}-\dfrac{1}{3\pi^2}\right)$

(2) $L^2\left(\dfrac{1}{3}-\dfrac{1}{2\pi^2}\right)$

(3) $L^3\left(\dfrac{1}{2}-\dfrac{1}{3\pi^2}\right)$

(4) $L^2\left(\dfrac{1}{3}-\dfrac{1}{4\pi^2}\right)$

(1) 1
(2) 2
(3) 3
(4) 4

1[Option ID=8141]
2[Option ID=8142]
3[Option ID=8143]
4[Option ID=8144]

Sl. No.37
QBID:8982037

If $\hat{H} = \frac{\hat{P}^2}{2m} + \hat{V}(x)$ then $[x, [x, \hat{H}]]$ is

(1) $-\frac{\hbar^2}{2m}$

(2) $\frac{-\hbar^2}{3m}$

(3) $\frac{-\hbar^2}{m}$

(4) $-\frac{\hbar^2}{4m}$

(1) 1

(2) 2

(3) 3

(4) 4

1[Option ID=8145]
2[Option ID=8146]
3[Option ID=8147]
4[Option ID=8148]

Sl. No.38
QBID:8982038

If $\hat{A}$ and $\hat{B}$ are two commuting operators, then

(1) $[\hat{A}, \hat{B}] = -i\hbar$

(2) $[\hat{A}, \hat{B}] = 0$

(3) $[\hat{A}, \hat{B}] = -1$

(4) $[\hat{A}, \hat{B}] = +1$

(1) 1

(2) 2

(3) 3

(4) 4

1[Option ID=8149]
2[Option ID=8150]
3[Option ID=8151]
4[Option ID=8152]

Sl. No.39
QBID:8982039

Which of the following statements is not true regarding the photoelectric effect experiment?

(1) Saturation current depends on the intensity of light

(2) Maximum Kinetic energy of photoelectrons is independent of frequency of light

(3) The stopping potential depends on frequency of light

(4) The ejection of photoelectron is almost instantaneous

(1) 1

(2) 2

(3) 3

(4) 4

1[Option ID=8153]
2[Option ID=8154]
3[Option ID=8155]
4[Option ID=8156]

Sl. No.40
QBID:8982040

A mole of ideal gas expands from volume V_1 to V_2 at constant pressure P. The initial temperature is T_1. The final temperature is

(1) T_1
(2) $T_1(V_2/V_1)$
(3) $T_1(V_1/V_2)$
(4) $T_1 \ln(V_2/V1)$

(1) 1
(2) 2
(3) 3
(4) 4

1[Option ID=8157]
2[Option ID=8158]
3[Option ID=8159]
4[Option ID=8160]

Sl. No.41
QBID:8982041

A 1-dimensional ideal gas is kept at temperature T. The molecular weight of the particles is m. The most probable speed is

(1) 0
(2) $\sqrt{k_B T/m}$
(3) $k_B T/m$
(4) $(k_B T/m)^2$

(1) 1
(2) 2
(3) 3
(4) 4

1[Option ID=8161]
2[Option ID=8162]
3[Option ID=8163]
4[Option ID=8164]

Sl. No.42
QBID:8982042

A quantum harmonic oscillator in one dimension is kept at temperature T. The frequency is w. The average energy of the oscillator is

(1) $\hbar w/2$
(2) $\hbar w e^{-\beta\hbar w}$
(3) $\frac{\hbar w}{2} + \hbar w\left(\frac{e^{-\beta\hbar w}}{1-e^{-\beta\hbar w}}\right)$
(4) $\frac{\hbar w}{2}\left(1-e^{-\beta\hbar w}\right)^{-1}$

(1) 1
(2) 2
(3) 3
(4) 4

1[Option ID=8165]
2[Option ID=8166]
3[Option ID=8167]
4[Option ID=8168]

Sl. No.43
QBID:8982043

For a magnetic material, C_h and C_m are the specific heats at constant magnetic field and magnetization, respectively. Then

(1) $C_h > C_m$

(2) $C_h = C_m$

(3) $C_h < C_m$

(4) The relative values of C_h and C_m depend on the magnetic material

(1) 1

(2) 2

(3) 3

(4) 4

1[Option ID=8169]
2[Option ID=8170]
3[Option ID=8171]
4[Option ID=8172]

Sl. No.44
QBID:8982044

Consider the phase diagram of a magnet. Which statement is correct?

(1) The system has three possible phases

(2) There is a first-order phase transition line between the up and down states

(3) The phase diagram only has first-order transitions

(4) The magnetic phase has higher entropy than the paramagnetic phase

(1) 1

(2) 2

(3) 3

(4) 4

1[Option ID=8173]
2[Option ID=8174]
3[Option ID=8175]
4[Option ID=8176]

Sl. No.45
QBID:8982045

Sunlight arrives at the earth at the rate of about 1.4 kW/m^2 when the sun is directly overhead. The average radius of earth's orbit is 1.5×10^{11} m and the radius of the sun is 7.0×10^8 m. Assuming that the sun radiates like a black body, the surface temperature of the sun is

(1) 5.8×10^3 K

(2) 5.8×10^7 K

(3) 5.8×10^5 K

(4) 5.8×10^{12} K

(1) 1

(2) 2

(3) 3

(4) 4

1[Option ID=8177]
2[Option ID=8178]
3[Option ID=8179]
4[Option ID=8180]

Sl. No.46
QBID:8982046

Calculate the ratio of specific heat (γ) of mercury at 20°C and atmospheric pressure.

Given:

Specific heat at constant pressure $C_p = 139$ J/kg

Specific volume $V = 7.38 \times 10^{-5}$ m³/kg

Volume expansivity $\beta = 1.81 \times 10^{-4}$ K⁻¹ and isothermal compressibility $K = 4.01 \times 10^{-11}$ Pa⁻¹

(1) 1.15 (2) 1.75

(3) 1.25 (4) 1.85

(1) 1

(2) 2

(3) 3

(4) 4

1[Option ID=8181]
2[Option ID=8182]
3[Option ID=8183]
4[Option ID=8184]

Sl. No.47
QBID:8982047

A mercury atom moves in a cubical box whose edge is 1 m long. Its kinetic energy is equal to the average kinetic energy of an atom of an ideal gas at 1000 K. If the quantum numbers n_x, n_y and n_z are all equal to n, the value of n is

(1) 2×10^{11} (2) 3×10^{9}

(3) 4×10^{10} (4) 5×10^{8}

(1) 1

(2) 2

(3) 3

(4) 4

1[Option ID=8185]
2[Option ID=8186]
3[Option ID=8187]
4[Option ID=8188]

Sl. No.48
QBID:8982048

For a thin film of Bismuth, the Hall coefficient at room temperature is determined to be 5.4×10^{-7} m³/C. The corresponding carrier concentration is

(1) 1×10^{23} per m³ (2) 6.62×10^{23} per cm³

(3) 1.1×10^{25} per m³ (4) 3.2×10^{10} per cc

(1) 1

(2) 2

(3) 3

(4) 4

1[Option ID=8189]
2[Option ID=8190]

3[Option ID=8191]
4[Option ID=8192]

Sl. No.49
QBID:8982049

Experiments indicate that 13.6 eV is required to separate a hydrogen atom into a proton and an electron. The orbital radius of the electron in a hydrogen atom is

(1) 5.3×10^{-11} m
(2) 5.3×10^{-12} m
(3) 5.3×10^{-10} m
(4) 5.3×10^{-9} m

(1) 1
(2) 2
(3) 3
(4) 4

1[Option ID=8193]
2[Option ID=8194]
3[Option ID=8195]
4[Option ID=8196]

Sl. No.50
QBID:8982050

Which of the following was the first laser?

(1) Ruby laser
(2) He-Ne laser
(3) Nd-YAG laser
(4) CO_2 laser

(1) 1
(2) 2
(3) 3
(4) 4

1[Option ID=8197]
2[Option ID=8198]
3[Option ID=8199]
4[Option ID=8200]

Sl. No.51
QBID:8982051

The output wave length of the He-Ne laser is given by

(1) 632.8 nm
(2) 682.3 nm
(3) 694.3 nm
(4) 540.0 nm

(1) 1
(2) 2
(3) 3
(4) 4

1[Option ID=8201]
2[Option ID=8202]
3[Option ID=8203]
4[Option ID=8204]

Sl. No.52
QBID:8982052

The ratio of the rate of stimulated emission to the rate of spontaneous emission is directly proportional to

(1) ν^{-1} (2) ν^{-2}

(3) ν^{-3} (4) ν^{-5}

(1) 1

(2) 2

(3) 3

(4) 4

1[Option ID=8205]
2[Option ID=8206]
3[Option ID=8207]
4[Option ID=8208]

Sl. No.53
QBID:8982053

The root-mean-square (rms) speed of an ideal - gas molecule is

(1) $\sqrt{\frac{3k_BT}{m}}$ (2) $\sqrt{\frac{2k_BT}{m}}$

(3) $\sqrt{\frac{8k_BT}{\pi m}}$ (4) $\sqrt{\frac{3\pi k_BT}{m}}$

(1) 1

(2) 2

(3) 3

(4) 4

1[Option ID=8209]
2[Option ID=8210]
3[Option ID=8211]
4[Option ID=8212]

Sl. No.54
QBID:8982054

The overall degeneracy of a 3d state of a lithium atom is

(1) 6 (2) 8

(3) 10 (4) 12

(1) 1

(2) 2

(3) 3

(4) 4

1[Option ID=8213]
2[Option ID=8214]
3[Option ID=8215]
4[Option ID=8216]

Sl. No.55
QBID:8982055

In a one-dimensional infinite square well of length 'l' there are 5×10^{10} electrons per meter. If all the lowest energy levels are filled, what will be the energy of the most energetic electron?

$(m_e = 9.1 \times 10^{-31}\, kg,\ c = 3 \times 10^{8}\, m/s)$

(1) 102 eV
(2) 235 eV
(3) 465 eV
(4) 525 eV

(1) 1
(2) 2
(3) 3
(4) 4

1[Option ID=8217]
2[Option ID=8218]
3[Option ID=8219]
4[Option ID=8220]

Sl. No.56
QBID:8982056

Air needs to be pumped out from outer jacket of a cryostat for low temperature measurements so as to

(1) Create electrical insulation
(2) Clean the chamber
(3) Create thermal insulation
(4) Avoid vibrational issues

(1) 1
(2) 2
(3) 3
(4) 4

1[Option ID=8221]
2[Option ID=8222]
3[Option ID=8223]
4[Option ID=8224]

Sl. No.57
QBID:8982057

Which of the following experimental techniques is used to determine the Fermi surface of a metal

(1) Shubnikow-de Haas effect
(2) Nernst effect
(3) Hall effect
(4) Energy dispersive x-ray analysis

(1) 1
(2) 2
(3) 3
(4) 4

1[Option ID=8225]
2[Option ID=8226]
3[Option ID=8227]
4[Option ID=8228]

Sl. No.58
QBID:8982058

Which of the following statement is not true?

(1) Planck's constant can be determined from photoelectric current measurement

(2) Band gap of a semiconductor can be determined from the measurement of electrical conductivity as a function of temperature

(3) Curie constant can be determined from AC magnetic susceptibility set up

(4) Seebeck coefficient can be determined from thermal conductivity measurement

(1) 1

(2) 2

(3) 3

(4) 4

1[Option ID=8229]
2[Option ID=8230]
3[Option ID=8231]
4[Option ID=8232]

Sl. No.59
QBID:8982059

To estimate energy band gap of a semiconductor from electrical conductivity vs. temperature data we would need

(1) Log-log graph paper

(2) Semi-log graph paper

(3) Cartesian graph paper with temperature in x-axis

(4) Millimeter graph paper with conductivity in x-axis

(1) 1

(2) 2

(3) 3

(4) 4

1[Option ID=8233]
2[Option ID=8234]
3[Option ID=8235]
4[Option ID=8236]

Sl. No.60
QBID:8982060

The questions are based on the following passage :

The electrical conductivity and carrier concentration of a metal are found to be 10^6 ohm-m and 10^{28} per m^3 respectively. The charge of electron is 1.6×10^{-19} C and mass of the electron is 9.1×10^{-31} kg.

Using free electron theory answer the following questions

The relaxation time between collisions can be estimated using the following expression. (Symbols have their usual meaning).

(1) $\sigma = \frac{ne^2\tau}{2m}$

(2) $I = I_0 \exp\left(\frac{eV}{k_B T}\right)$

(3) $\overline{F} = m\overline{a}$

(4) $R_H = \frac{1}{ne}$

(1) 1

(2) 2

(3) 3

(4) 4

1[Option ID=8237]
2[Option ID=8238]
3[Option ID=8239]
4[Option ID=8240]

Sl. No.61
QBID:8982061

The questions are based on the following passage :

The electrical conductivity and carrier concentration of a metal are found to be 10^6 ohm-m and 10^{28} per m^3 respectively. The charge of electron is 1.6×10^{-19} C and mass of the electron is 9.1×10^{-31} kg.

Using free electron theory answer the following questions

The relaxation time is estimated to be

(1) 6.2×10^{-21} s

(2) 3.9×10^{-11} s

(3) 7.1×10^{-15} s

(4) 6.3×10^{12} s

(1) 1

(2) 2

(3) 3

(4) 4

1[Option ID=8241]
2[Option ID=8242]
3[Option ID=8243]
4[Option ID=8244]

Sl. No.62
QBID:8982062

The questions are based on the following passage :

The electrical conductivity and carrier concentration of a metal are found to be 10^6 ohm-m and 10^{28} per m^3 respectively. The charge of electron is 1.6×10^{-19} C and mass of the electron is 9.1×10^{-31} kg.

Using free electron theory answer the following questions

With average speed of the electron 10^6 m/sec , the mean free path is given by

(1) 4 mm
(2) 3 μm
(3) 2 km
(4) 71 A°

(1) 1
(2) 2
(3) 3
(4) 4

1[Option ID=8245]
2[Option ID=8246]
3[Option ID=8247]
4[Option ID=8248]

Sl. No.63
QBID:8982063

The questions are based on the following passage :

The electrical conductivity and carrier concentration of a metal are found to be 10^6 ohm-m and 10^{28} per m^3 respectively. The charge of electron is 1.6×10^{-19} C and mass of the electron is 9.1×10^{-31} kg.

Using free electron theory answer the following questions

The amount of energy an electron can absorb between collisions, when subjected to an external electric field of $10^3\, V/m$, is

(1) 2×10^{-6} J
(2) 30 eV
(3) 11.2×10^{-25} J
(4) 3.9×10^{-31} eV

(1) 1
(2) 2
(3) 3
(4) 4

1[Option ID=8249]
2[Option ID=8250]
3[Option ID=8251]
4[Option ID=8252]

Sl. No.64
QBID:8982064

Magnetic susceptibility of aluminum at room temperature is 1.5×10^{-9}. Calculate its magnetization when a field $B=1T$ is applied

(1) 1.19×10^{-3} A/m
(2) 2.19×10^{-6} A/m
(3) 4.01×10^{-8} A/m
(4) 3.61×10^{-9} A/m

(1) 1
(2) 2
(3) 3
(4) 4

1[Option ID=8253]
2[Option ID=8254]

3[Option ID=8255]
4[Option ID=8256]

Sl. No.65
QBID:8982065

A type-I superconductor with $T_c = 15\,\text{K}$ has $\frac{dB_c}{dT} = -30\ mT/K$ at T_c. What will be the value of critical field at 5 K?

(1) 100 mT (2) 200 mT
(3) 300 mT (4) 400 mT

(1) 1
(2) 2
(3) 3
(4) 4

1[Option ID=8257]
2[Option ID=8258]
3[Option ID=8259]
4[Option ID=8260]

Sl. No.66
QBID:8982066

What will be the repulsive electric force on a proton whose centre is 3 fm from the centre of another proton. (Assume the protons are uniformly charged spheres of positive charge)

($\epsilon_0 = 8.85 \times 10^{-12}\ C^2/Nm^2$, $e = 1.6 \times 10^{-19}$ C)

(1) 25 N (2) 55 N
(3) 85 N (4) 100 N

(1) 1
(2) 2
(3) 3
(4) 4

1[Option ID=8261]
2[Option ID=8262]
3[Option ID=8263]
4[Option ID=8264]

Sl. No.67
QBID:8982067

Which of the following is a multiferroic material?

(1) $BiFeO_3$ (2) MgO
(3) $SrTiO_3$ (4) Ge

(1) 1
(2) 2
(3) 3
(4) 4

1[Option ID=8265]
2[Option ID=8266]
3[Option ID=8267]
4[Option ID=8268]

Sl. No.68
QBID:8982068

A material whose K absorption edge is 0.2 Å is irradiated with 0.10 Å x-rays. Calculate the maximum kinetic energy of photo electrons that are emitted from the K-shell (hc = 12.4 keV)

(1) 12 keV (2) 22 keV

(3) 32 keV (4) 62 keV

(1) 1

(2) 2

(3) 3

(4) 4

1[Option ID=8269]
2[Option ID=8270]
3[Option ID=8271]
4[Option ID=8272]

Sl. No.69
QBID:8982069

The average lifetime of μ - mesons with a speed of 0.55 c is measured to be 5×10^{-6} s. What is the average life time of μ -mesons in a system in which they are at rest?

(1) $4.31 \times 10^{-3}\, s$ (2) $3.48 \times 10^{-6}\, s$

(3) $2.13 \times 10^{-8}\, s$ (4) $5.44 \times 10^{-9}\, s$

(1) 1

(2) 2

(3) 3

(4) 4

1[Option ID=8273]
2[Option ID=8274]
3[Option ID=8275]
4[Option ID=8276]

Sl. No.70
QBID:8982070

A large crystal is used to extract single-energy neutrons from a beam of neutrons emerging from a reactor. The spacing of the Bragg planes is 1Å. If the Bragg angle is set to be 30°, What is the energy of neutrons seen at this angle for a first-order reflection? ($hc = 12.4 \times 10^3$ eV. Å, $m_0 c^2 = 9.4 \times 10^8$eV)

(1) 0.081 eV (2) 0.205 eV

(3) 0.801 eV (4) 1.102 eV

(1) 1

(2) 2

(3) 3

(4) 4

1[Option ID=8277]
2[Option ID=8278]
3[Option ID=8279]
4[Option ID=8280]

Sl. No.71
QBID:8982071

An electron has a kinetic energy of 3 MeV. Calculate its speed. The rest mass of the electron is 9.1×10^{-31} kg

(1) 1.51×10^{7} m/s
(2) 2.51×10^{6} m/s
(3) 2.82×10^{7} m/s
(4) 2.96×10^{8} m/s

(1) 1
(2) 2
(3) 3
(4) 4

1[Option ID=8281]
2[Option ID=8282]
3[Option ID=8283]
4[Option ID=8284]

Sl. No.72
QBID:8982072

Out of the following decay reactions, which one is allowed in terms of Baryon, Lepton and charge conservations

(1) $\nu_u + p \rightarrow \mu^+ + n$
(2) $\nu_e + p \rightarrow e^- + \pi^+ + p$
(3) $K^+ \rightarrow \pi^\circ + \mu^+ + \nu_\mu$
(4) $\nu_e + n \rightarrow \pi^+ + K^+ + e^-$

(1) 1
(2) 2
(3) 3
(4) 4

1[Option ID=8285]
2[Option ID=8286]
3[Option ID=8287]
4[Option ID=8288]

Sl. No.73
QBID:8982073

The atomic mass of Zn isotope ${}^{64}_{30}Zn$ is 63.929 amu. The difference in its binding energy as calculated from semi empirical mass formula and from nuclear composition is :

Given; surface coefficient $a_s = 13.0\,MeV$, volume coefficient $a_v = 14.1\,\text{MeV}$, Coulombs coefficient $a_c = 0.595\,MeV$, asymmetry coefficient $a_a = 19.0\,MeV$, pairing coefficient $a_p = 33.5\,MeV$, $m_p = 1.0072$ amu and $m_n = 1.0086\,amu$)

(1) 3.5 MeV
(2) 2.6 MeV
(3) 4.2 MeV
(4) 5.4 MeV

(1) 1
(2) 2
(3) 3
(4) 4

1[Option ID=8289]
2[Option ID=8290]
3[Option ID=8291]
4[Option ID=8292]

Sl. No.74
QBID:8982074

In the α-decay reaction of ${}^{240}_{94}Pu \rightarrow {}^{236}_{92}U + {}^{4}_{2}He$, the emitted $\alpha-$ particles are observed to have energies of 5.17 MeV and 5.12 MeV. The difference in Q values will be

(1) 0.5 MeV
(2) 0.05 MeV
(3) 0.65 MeV
(4) 0.75 MeV

(1) 1
(2) 2
(3) 3
(4) 4

1[Option ID=8293]
2[Option ID=8294]
3[Option ID=8295]
4[Option ID=8296]

Sl. No.75
QBID:8982075

The quark structure of π° - meson is

(1) $\pi^{\circ} = u\overline{d}$
(2) $\pi^{\circ} = \frac{1}{\sqrt{2}}\left(u\overline{d} - \overline{u}\,d\right)$
(3) $\pi^{\circ} = \overline{u}\,d$
(4) $\pi^{\circ} = \frac{1}{\sqrt{2}}\left(u\overline{u} - d\overline{d}\right)$

(1) 1
(2) 2
(3) 3
(4) 4

1[Option ID=8297]
2[Option ID=8298]
3[Option ID=8299]
4[Option ID=8300]

Sl. No.76
QBID:8982076

Which of the following materials has linear dispersion (E vs. K)

(1) Si
(2) La_2CuO_4
(3) Graphene
(4) $BaTiO_3$

(1) 1
(2) 2
(3) 3
(4) 4

1[Option ID=8301]
2[Option ID=8302]
3[Option ID=8303]
4[Option ID=8304]

Sl. No.77
QBID:8982077

Thermal neutrons are captured by ${}^{10}_{5}B$ to form ${}^{11}_{5}B$, which decays by α-particle emission to ${}^{7}_{3}Li$. The kinetic energy of the α-particle is:

(Given : atomic mass of ${}^{10}_{5}B = 10.01611$ amu, ${}^{1}_{0}n = 1.008987\ amu$, ${}^{7}_{3}Li = 7.01822$ amu ${}^{4}_{2}He = 4.003879$ amu, 1 amu = 931 MeV)

(1) 1.01 MeV
(2) 1.78 MeV
(3) 1.95 MeV
(4) 2.41 MeV

(1) 1
(2) 2
(3) 3
(4) 4

1[Option ID=8305]
2[Option ID=8306]
3[Option ID=8307]
4[Option ID=8308]

Sl. No.78
QBID:8982078

Match List I with List II

List I Superconductor		List II Critical temperature Tc (K)	
(A)	Hg	(I)	0.85
(B)	Al	(II)	4.15
(C)	Sn	(III)	1.18
(D)	Zn	(IV)	3.72

Choose the correct answer from the options given below.

(1) (A)-(II), (B)-(I), (C)-(IV), (D)-(III)
(2) (A)-(II), (B)-(III), (C)-(IV), (D)-(I)
(3) (A)-(II), (B)-(I), (C)-(III), (D)-(IV)
(4) (A)-(II), (B)-(IV), (C)-(III), (D)-(I)

(1) 1
(2) 2
(3) 3
(4) 4

1[Option ID=8309]
2[Option ID=8310]
3[Option ID=8311]
4[Option ID=8312]

Sl. No.79
QBID:8982079

Which of the following is not an observed β-decay process?

(1) $n \rightarrow p + \bar{e} + \bar{\nu}_e$
(2) $p \rightarrow n + e^{+} + \nu_e$
(3) $n + {}^{14}_{7}N \rightarrow {}^{14}_{6}C + {}^{1}_{1}H$
(4) $p + \bar{e} \rightarrow n + \nu_e$

(1) 1

(2) 2

(3) 3

(4) 4

1[Option ID=8313]
2[Option ID=8314]
3[Option ID=8315]
4[Option ID=8316]

Sl. No.80
QBID:8982080

Consider the fusion reaction

$6\,{}^{2}_{1}H \rightarrow 2\,{}^{4}_{2}He + 2p + 2n + 43\,MeV$

The amount of energy released by fusing all nuclei in 1 kg of deuterium is

(1) 10^{8} kWh (2) 6.023×10^{23} eV

(3) $258\,MeV$ (4) 10^{3} MWh

(1) 1

(2) 2

(3) 3

(4) 4

1[Option ID=8317]
2[Option ID=8318]
3[Option ID=8319]
4[Option ID=8320]

Sl. No.81
QBID:8982081

The magnetic effect which is analogous to converse piezoelectric effect

(1) Exchange interaction (2) Magnetostriction

(3) Magnetic hysteresis (4) Anti ferromagnetism

(1) 1

(2) 2

(3) 3

(4) 4

1[Option ID=8321]
2[Option ID=8322]
3[Option ID=8323]
4[Option ID=8324]

Sl. No.82
QBID:8982082

A woman in a rocket moving with a speed 0.6c away from a space platform shines a light of wavelength 5000 Å towards the platform. What is the frequency of the light as seen by an observer on the platform?

(1) 3×10^{15} Hz (2) 3×10^{14} Hz

(3) 3×10^{16} Hz (4) 2×10^{14} Hz

(1) 1

(2) 2

(3) 3

(4) 4

1[Option ID=8325]
2[Option ID=8326]
3[Option ID=8327]
4[Option ID=8328]

Sl. No.83
QBID:8982083

The specific heat at constant pressure C_p is related to C_v by the relation

(Where α is the thermal expansion co-efficient, K is the compressibility, T and V are the temperature and volume)

(1) $(C_p - C_v)\,\alpha^2 = \frac{v}{KT}$

(2) $(C_p - C_v)T = \frac{\alpha^2 V}{K}$

(3) $C_p - C_v = \frac{\alpha^2 TV}{K}$

(4) $C_p - C_v = \frac{\alpha TV}{K}$

(1) 1

(2) 2

(3) 3

(4) 4

1[Option ID=8329]
2[Option ID=8330]
3[Option ID=8331]
4[Option ID=8332]

Sl. No.84
QBID:8982084

Which of the following statements is not true

(1) If A is a Hermitian matrix, then e^{iA} is unitary

(2) Eigen values of a Hermitian matrix are all real

(3) All physical observables are represented by Hermitian matrices

(4) If A and B are two Hermitian matrices, then AB is Hermitian only if A and B do not commute

(1) 1

(2) 2

(3) 3

(4) 4

1[Option ID=8333]
2[Option ID=8334]
3[Option ID=8335]
4[Option ID=8336]

Sl. No.85
QBID:8982085

The atomic ratio between the uranium isotopes ^{238}U and ^{234}U in a mineral sample is found to be 2×10^4. The half-life of ^{234}U is $T_{1/2}(234) = 3 \times 10^5\ y$. The half-life of ^{238}U is

(1) 5×10^3 y

(2) 7×10^6 y

(3) 6×10^9 y

(4) 9×10^{12} y

(1) 1

(2) 2

(3) 3

(4) 4

1[Option ID=8337]
2[Option ID=8338]
3[Option ID=8339]
4[Option ID=8340]

Sl. No.86
QBID:8982086

In central-force motion, a body moves around a central point with a potential V(r) ~ -exp $(-\lambda r)$ where λ is a parameter.

Which of the statements is correct?

(1) The energy is not conserved

(2) The angular momentum is a constant of motion

(3) The linear momentum is a constant of motion

(4) The body always executes circular motion

(1) 1

(2) 2

(3) 3

(4) 4

1[Option ID=8341]
2[Option ID=8342]
3[Option ID=8343]
4[Option ID=8344]

Sl. No.87
QBID:8982087

Consider a ring of mass M and radius R. The moment of inertia about an axis passing through a diameter is

(1) $MR^2/3$ (2) $MR^2/2$

(3) MR^2 (4) $2MR^2$

(1) 1

(2) 2

(3) 3

(4) 4

1[Option ID=8345]
2[Option ID=8346]
3[Option ID=8347]
4[Option ID=8348]

Sl. No.88
QBID:8982088

The input voltage to an op-amp is a large voltage step The output is an exponential waveform that changes to 0.5 V in 0.15 μs. Calculate the slew rate of the op-amp

(1) 3.33 V/μs (2) 9.43 V/μs

(3) 15.53 V/μs (4) 21.33 V/μs

(1) 1

(2) 2

(3) 3

(4) 4

1[Option ID=8349]
2[Option ID=8350]
3[Option ID=8351]
4[Option ID=8352]

Sl. No.89
QBID:8982089

The questions are based on the following circuit. The op-amp is connected as a non-inverting amplifier with $R_1 = 1.1\,k\Omega$, $R_F = 15\,k\Omega$

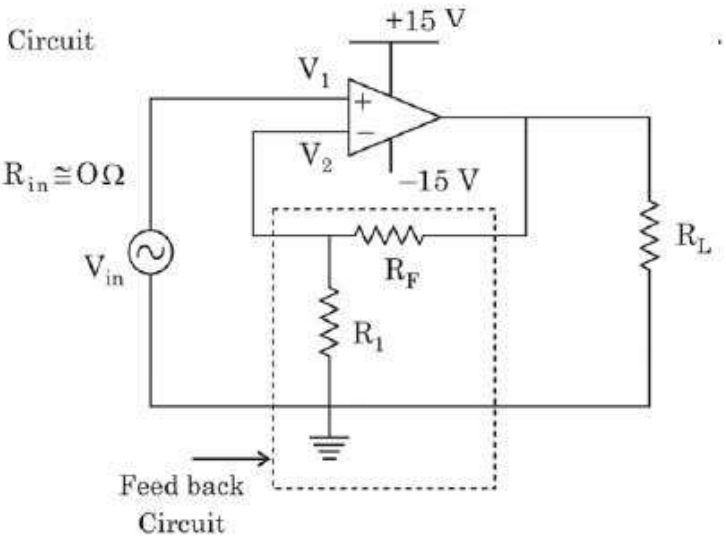

(Given : A (open loop voltage gain) = 2,00,000, input resistance $R_i = 2\,M\Omega$ output resistance, $R_0 = 55\,\Omega$, break frequency of an ap-amp $f_0 \cong 10$Hz supply voltages $= \pm 15\,V$, output voltage swing $= \pm 12\,V$).

The closed loop voltage gain (A_F) is

(1) 4.12 (2) 14.63

(3) 32.61 (4) 66.15

(1) 1

(2) 2

(3) 3

(4) 4

1[Option ID=8353]
2[Option ID=8354]
3[Option ID=8355]
4[Option ID=8356]

Sl. No.90
QBID:8982090

The questions are based on the following circuit. The op-amp is connected as a non-inverting amplifier with $R_1 = 1.1\,k\Omega$, $R_F = 15\,k\Omega$

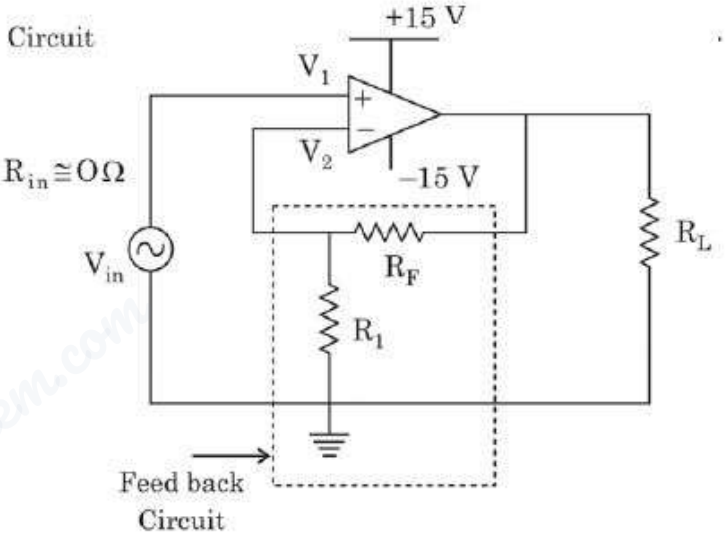

(Given : A (open loop voltage gain) = 2,00,000, input resistance $R_i = 2\,M\Omega$ output resistance, $R_0 = 55\,\Omega$, break frequency of an ap-amp $f_0 \cong 10$Hz supply voltages $= \pm 15\,V$, output voltage swing $= \pm 12\,V$).

What is the value of input resistance of an op-amp with feedback (R_{iF})?

(1) 17.30 $M\Omega$

(2) 34.41 $M\Omega$

(3) 27.33 $G\Omega$

(4) 73.13 $G\Omega$

(1) 1

(2) 2

(3) 3

(4) 4

1[Option ID=8357]
2[Option ID=8358]
3[Option ID=8359]
4[Option ID=8360]

Sl. No.91
QBID:8982091

The questions are based on the following circuit. The op-amp is connected as a non-inverting amplifier with $R_1 = 1.1\,k\Omega$, $R_F = 15\,k\Omega$

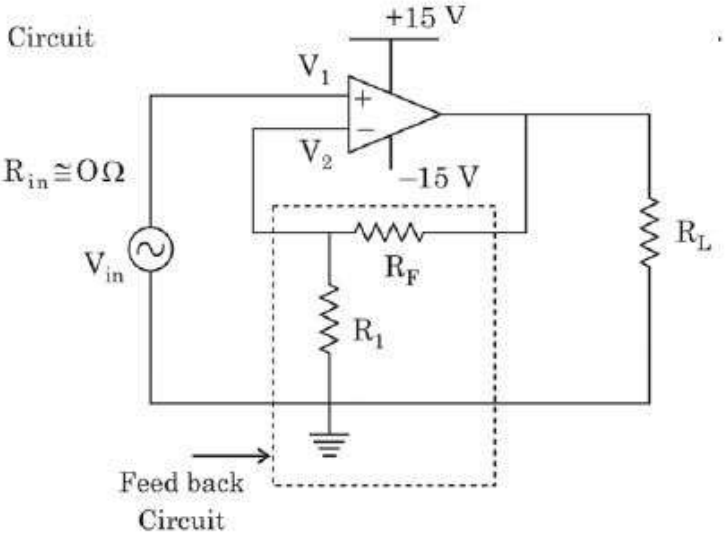

(Given : A (open loop voltage gain) = 2,00,000, input resistance $R_i = 2\,M\Omega$ output resistance, $R_0 = 55\,\Omega$, break frequency of an ap-amp $f_0 \cong 10$Hz supply voltages $= \pm 15\,V$, output voltage swing $= \pm 12\,V$).

The bandwidth of the non-inverting amplifier with feedback (f_F) is

(1) 33.31 Hz
(2) 143.41 Hz
(3) 83.13 kHz
(4) 136.65 kHz

(1) 1

(2) 2

(3) 3

(4) 4

1[Option ID=8361]
2[Option ID=8362]
3[Option ID=8363]
4[Option ID=8364]

Sl. No.92
QBID:8982092

The questions are based on the following circuit. The op-amp is connected as a non-inverting amplifier with $R_1 = 1.1\,k\Omega$, $R_F = 15\,k\Omega$

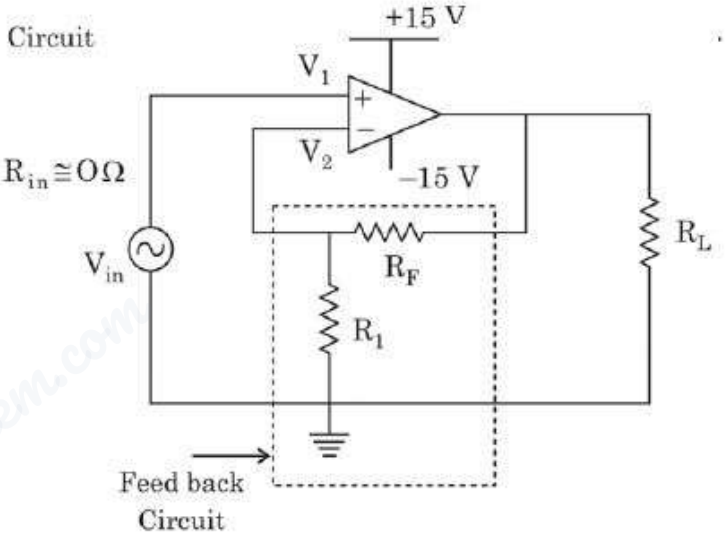

(Given : A (open loop voltage gain) = 2,00,000, input resistance $R_i = 2\,M\Omega$ output resistance, $R_0 = 55\,\Omega$, break frequency of an ap-amp $f_0 \cong 10$Hz supply voltages $= \pm 15\,V$, output voltage swing $= \pm 12\,V$).

The value of total output offset voltage with feedback (V_{OOT}) is

(1) 0.33 mV (2) 0.88 mV

(3) 2.22 mV (4) 4.44 mV

(1) 1

(2) 2

(3) 3

(4) 4

1[Option ID=8365]
2[Option ID=8366]
3[Option ID=8367]
4[Option ID=8368]

Sl. No.93
QBID:8982093

The questions are based on the following circuit

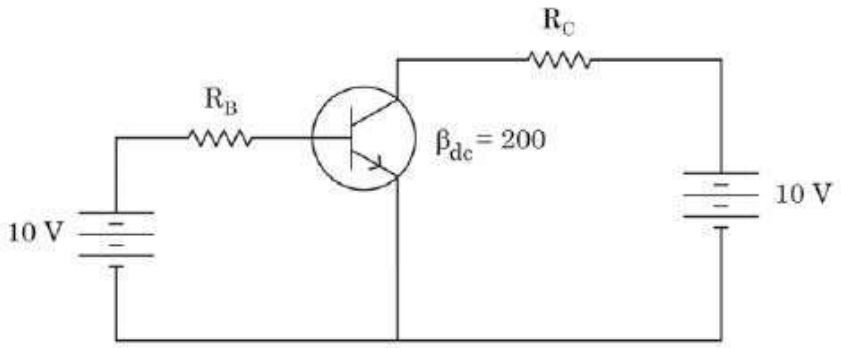

The transistor has $\beta_{dc} = 200$ and $V_{BE} = 0$ (for the ideal transistor) with $R_B = 500\,k\Omega$ and $R_c = 1.5\,k\Omega$

The values of base current (I_B) and collector current (I_C) are

(1) $2\ \mu A$ and $0.3\ mA$

(2) $5\ \mu A$ and $1\ mA$

(3) $10\ \mu A$ and $2\ mA$

(4) $20\ \mu A$ and $4\ mA$

(1) 1

(2) 2

(3) 3

(4) 4

1[Option ID=8369]
2[Option ID=8370]
3[Option ID=8371]
4[Option ID=8372]

Sl. No.94
QBID:8982094

The questions are based on the following circuit

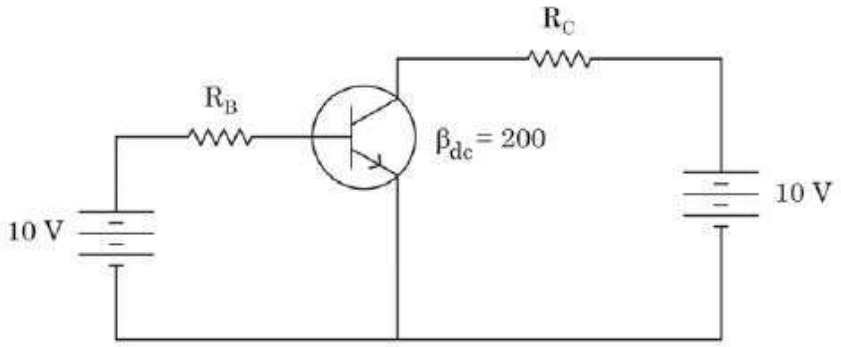

The transistor has $\beta_{dc} = 200$ and $V_{BE} = 0$ (for the ideal transistor) with $R_B = 500\,k\Omega$ and $R_c = 1.5\,k\Omega$

The value of the collector emitter voltage is

(1) 1 V (2) 4 V

(3) 10 V (4) 20 V

(1) 1

(2) 2

(3) 3

(4) 4

1[Option ID=8373]
2[Option ID=8374]
3[Option ID=8375]
4[Option ID=8376]

Sl. No.95
QBID:8982095

The questions are based on the following circuit

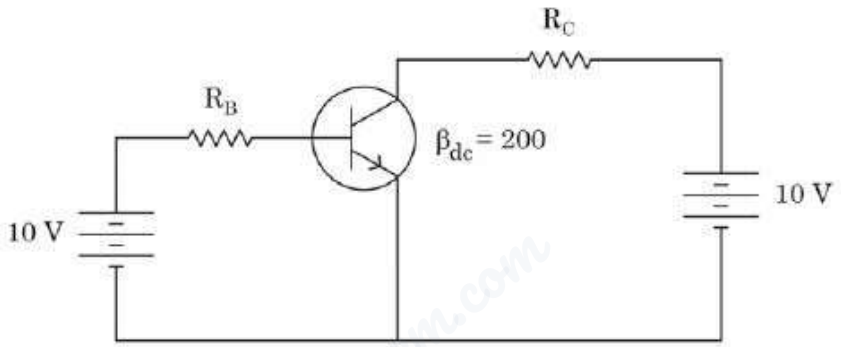

The transistor has $\beta_{dc} = 200$ and $V_{BE} = 0$ (for the ideal transistor) with $R_B = 500\,k\Omega$ and $R_c = 1.5\,k\Omega$

The value of the collector power dissipation is

(1) 16 mW (2) 42 mW

(3) 63 mW (4) 80 mW

(1) 1

(2) 2

(3) 3

(4) 4

1[Option ID=8377]
2[Option ID=8378]
3[Option ID=8379]
4[Option ID=8380]

Sl. No.96
QBID:8982096

Consider the Boolean expression

$Y = A\overline{B} + \overline{A}B$

If $A = 1$ and $B = 1$, then what will be the value of Y?

(1) 1 (2) 0

(3) 11 (4) 10

(1) 1

(2) 2

(3) 3

(4) 4

1[Option ID=8381]
2[Option ID=8382]
3[Option ID=8383]
4[Option ID=8384]

Sl. No.97
QBID:8982097

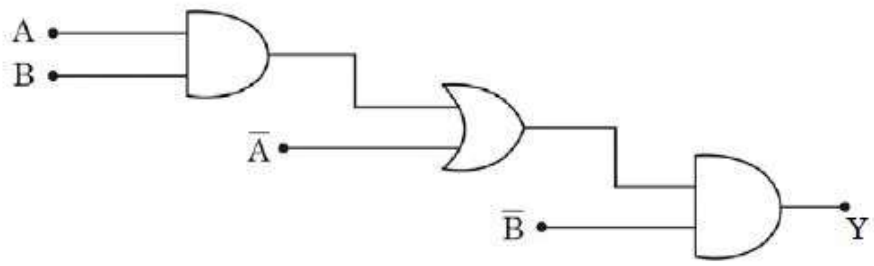

What will be the Boolean expression for the given logic gate?

(1) $Y = AB$ (2) $Y = \overline{A}\,\overline{B}$

(3) $Y = A\overline{B} + \overline{A}B$ (4) $Y = AB + \overline{A}\,\overline{B}$

(1) 1

(2) 2

(3) 3

(4) 4

1[Option ID=8385]
2[Option ID=8386]
3[Option ID=8387]
4[Option ID=8388]

Sl. No.98
QBID:8982098

Which of the following materials is not a superconductor down to the lowest measured temperature?

(1) MgB_2 (2) $Bi_2 Sr_2 Ca_2 Cu_3 O_{10}$

(3) Bi (4) Ag

(1) 1

(2) 2

(3) 3

(4) 4

1[Option ID=8389]
2[Option ID=8390]
3[Option ID=8391]
4[Option ID=8392]

Sl. No.99
QBID:8982099

Which of the following is not a direct band gap semiconductor?

(1) CdSe (2) SnTe

(3) Si (4) GaAs

(1) 1

(2) 2

(3) 3

(4) 4

1[Option ID=8393]
2[Option ID=8394]
3[Option ID=8395]
4[Option ID=8396]

Sl. No.100
QBID:8982100

Consider the complex integral

$$I = \oint_C dz e^{1/z}$$

where C is the unit circle $(|z|=1)$ in the counter clockwise direction. The value of I is

(1) 0 (2) πi

(3) $2\pi i$ (4) $4\pi i$

(1) 1

(2) 2

(3) 3

(4) 4

1[Option ID=8397]
2[Option ID=8398]
3[Option ID=8399]
4[Option ID=8400]