AglaSem Careers

Railway Recruitment Board

Notations :

1.Options shown in green color and with ✔ icon are correct.

2.Options shown in red color and with ✖ icon are incorrect.

Question Paper Name:	Senior Section Engineer 1st Sep Shift 3 Actual
Subject Name:	Senior Section Engineer
Creation Date:	2015-08-31 13:00:11.0
Cut Off:	0
Duration:	120
Number of Questions:	150
Total Marks:	150.0

Senior Section Engineer

Group Number :	1
Group Id :	36
Group Maximum Duration :	0
Group Minimum Duration :	120
Revisit allowed for view? :	No
Revisit allowed for edit? :	No
Break time:	0
Group Marks:	150.0

Senior Section Engineer

Section Id :	36
Section Number :	1
Section type :	Online
Mandatory or Optional:	Mandatory
Number of Questions:	150
Number of Questions to be attempted:	150
Section Marks:	150.0

Sub-Section Number:	1
Sub-Section Id:	36
Question Shuffling Allowed :	Yes

Question Number : 1 Question Id : 6301 Question Type : MCQ Option Shuffling : No
Correct : 1.0 Wrong : 0.33

A large body of infinite heat capacity is known as

a. Thermal Energy Reservoir (TER)

b. Mechanical energy reservoir (MER)

c. Thermometer

d. Heat pump

Options :

1. ✔ a
2. ✖ b
3. ✖ c
4. ✖ d

Question Number : 2 Question Id : 6302 Question Type : MCQ Option Shuffling : No
Correct : 1.0 Wrong : 0.33

"Heat always flows from a body at a higher temperature to a body at a lower temperature" is the statement of

a. First law of thermodynamics

b. Second law of thermodynamics

c. Third law of thermodynamics

d. Zeroth law of thermodynamics

Options :

1. ✖ a
2. ✔ b
3. ✖ c
4. ✖ d

Question Number : 3 Question Id : 6303 Question Type : MCQ Option Shuffling : No
Correct : 1.0 Wrong : 0.33

The network output for any heat engine is given by

a. Q_L-Q_H

b. Q_L+Q_H

c. Q_H-Q_L

d. 2Q_L

Where, Q_H = magnitude of heat transfer between heat engine and source

Q_L = magnitude of heat transfer between heat engine and sink

Options :

1. ✖ a
2. ✖ b
3. ✔ c
4. ✖ d

Question Number : 4 Question Id : 6304 Question Type : MCQ Option Shuffling : No
Correct : 1.0 Wrong : 0.33

A cyclic device which produces work continuously at the expense of heat input is known as

a. Refrigerator b. Heat pump c. Heat engine d. Throttling

Options :

1. ✖ a
2. ✖ b
3. ✔ c
4. ✖ d

Question Number : 5 Question Id : 6305 Question Type : MCQ Option Shuffling : No
Correct : 1.0 Wrong : 0.33

The substance for which Prandtl number (Pr) << 1 is characterized by

a. High rate of heat diffusion b. Low rate of heat diffusion

c. High rate of mass diffusion d. Low rate of mass diffusion

Options :

1. ✔ a
2. ✖ b
3. ✖ c
4. ✖ d

Question Number : 6 Question Id : 6306 Question Type : MCQ Option Shuffling : No
Correct : 1.0 Wrong : 0.33

The critical radius of insulation of cylinder is given by

a. k/h b. 2k/h c. k/2h d. k/4h

Options :

1. ✔ a
2. ✖ b
3. ✖ c
4. ✖ d

Question Number : 7 Question Id : 6307 Question Type : MCQ Option Shuffling : No
Correct : 1.0 Wrong : 0.33

Maximum spectral emissive power at temperature (T) is proportional to

a. T^4 b. T^5 c. $T^{5/2}$ d. T^3

Options :

1. ✖ a
2. ✔ b
3. ✖ c
4. ✖ d

Question Number : 8 Question Id : 6308 Question Type : MCQ Option Shuffling : No
Correct : 1.0 Wrong : 0.33

Indicated specific fuel consumption is defined as

a. (Fuel consumption per hour)/(Indicated work output)

b. (Fuel consumption per hour)/ (Indicated power output)

c. (Indicated power output)/(Fuel consumption per hour)

d. (Fuel consumption per distance travelled)/(Indicated power output)

Options :

1. ✖ a
2. ✔ b
3. ✖ c
4. ✖ d

Question Number : 9 Question Id : 6309 Question Type : MCQ Option Shuffling : No
Correct : 1.0 Wrong : 0.33

Which of the following characteristics does not belong to CI engine

a. Self ignition temperature of its fuel is low

b. Its compression ratio is comparatively higher

c. They are low speed engine

d. They are light weight engine

Options :

1. ✖ a
2. ✖ b
3. ✖ c
4. ✔ d

Question Number : 10 Question Id : 6310 Question Type : MCQ Option Shuffling : No
Correct : 1.0 Wrong : 0.33

The thermal efficiency of Otto cycle is a function of

a. Compression ratio only

b. Specific heats ratio only

c. Compression ratio and specific heat ratio

d. Clearance volume only

Options :

1. ✖ a
2. ✖ b
3. ✔ c
4. ✖ d

Question Number : 11 Question Id : 6311 Question Type : MCQ Option Shuffling : No
Correct : 1.0 Wrong : 0.33

Ignition quality of diesel is characterized by its

a. Boiling point b. Cetane number c. Octane number d. Flash point

Options :
1. ✖ a
2. ✔ b
3. ✖ c
4. ✖ d

Question Number : 12 Question Id : 6312 Question Type : MCQ Option Shuffling : No
Correct : 1.0 Wrong : 0.33

The property of sand by virtue of which it takes any desired pattern shapes under pressure and retains it after the pressure is removed is known as

a. Plasticity b. Flow ability c. Porosity d. Collapsibility

Options :
1. ✔ a
2. ✖ b
3. ✖ c
4. ✖ d

Question Number : 13 Question Id : 6313 Question Type : MCQ Option Shuffling : No
Correct : 1.0 Wrong : 0.33

Which of the operations can not be performed on drill machine

a. Reaming b. Boring c. Counter boring d. Facing

Options :
1. ✖ a
2. ✖ b
3. ✖ c
4. ✔ d

Question Number : 14 Question Id : 6314 Question Type : MCQ Option Shuffling : No
Correct : 1.0 Wrong : 0.33

The production of a conical surface by gradual reduction in diameter is known as

a. Taper turning b. Knurling c. Threading d. Boring

Options :

1. ✔ a
2. ✖ b
3. ✖ c
4. ✖ d

Question Number : 15 Question Id : 6315 Question Type : MCQ Option Shuffling : No
Correct : 1.0 Wrong : 0.33

A network that does not have either voltage or current sources is called

a. Active network.
b. Passive network.
c. Resistive network.
d. Dummy network.

Options :

1. ✖ a
2. ✔ b
3. ✖ c
4. ✖ d

Question Number : 16 Question Id : 6316 Question Type : MCQ Option Shuffling : No
Correct : 1.0 Wrong : 0.33

Watt hour is the unit of

a. Electric power.
b. Electric capacity.
c. Electric energy.
d. Electric charge

Options :

1. ✖ a
2. ✖ b
3. ✔ c
4. ✖ d

Question Number : 17 Question Id : 6317 Question Type : MCQ Option Shuffling : No
Correct : 1.0 Wrong : 0.33

An electric machine will have high efficiency when

a. input/output ratio is low

b. reactive power is more

c. kWh consumption is low

d. losses are low

Options :

1. ✖ a
2. ✖ b
3. ✖ c
4. ✔ d

Question Number : 18 Question Id : 6318 Question Type : MCQ Option Shuffling : No
Correct : 1.0 Wrong : 0.33

Which single phase motor would you select for a tape recorder?

a. Reluctance motor

b. Hysteresis motor

c. Synchronous motor

d. Universal motor

Options :

1. ✖ a
2. ✔ b
3. ✖ c
4. ✖ d

Question Number : 19 Question Id : 6319 Question Type : MCQ Option Shuffling : No
Correct : 1.0 Wrong : 0.33

A Buchholz relay can be installed on

a. auto-transformers

b. air-cooled transformers

c. welding transformers

d. oil cooled transformers

Options :

1. ✖ a
2. ✖ b
3. ✖ c
4. ✔ d

Question Number : 20 Question Id : 6320 Question Type : MCQ Option Shuffling : No
Correct : 1.0 Wrong : 0.33

A DC series motor is best suited for driving

a. Lathes.
b. Cranes and hoists.
c. Shears and punches.
d. Machine tools.

Options :

1. ✖ a
2. ✔ b
3. ✖ c
4. ✖ d

Question Number : 21 Question Id : 6321 Question Type : MCQ Option Shuffling : No
Correct : 1.0 Wrong : 0.33

The Power- factor at resonance in R-L-C circuit is

a. Zero.
b. Unity.
c. 0.5 lagging.
d. 0.5 leading

Options :

1. ✖ a
2. ✔ b
3. ✖ c
4. ✖ d

Question Number : 22 Question Id : 6322 Question Type : MCQ Option Shuffling : No
Correct : 1.0 Wrong : 0.33

Resistance of a wire is r ohms. The wire is stretched to double its length, then its resistance in ohms is

a. r/2
b. 4r
c. 2r
d. r/4

Options :

1. ✖ a
2. ✔ b
3. ✖ c
4. ✖ d

Question Number : 23 Question Id : 6323 Question Type : MCQ Option Shuffling : No
Correct : 1.0 Wrong : 0.33

Which of the following will remain the same in all parts of a series circuit?

a. Voltage
b. Current
c. Power
d. Resistance

Options :

1. ✖ a
2. ✔ b
3. ✖ c
4. ✖ d

Question Number : 24 Question Id : 6324 Question Type : MCQ Option Shuffling : No
Correct : 1.0 Wrong : 0.33

First nuclear power station in India established in

a. Tarapur
b. Kota
c. Kalpakkam
d. Narora

Options :

1. ✔ a
2. ✖ b
3. ✖ c
4. ✖ d

Question Number : 25 Question Id : 6325 Question Type : MCQ Option Shuffling : No
Correct : 1.0 Wrong : 0.33

The voltage levels for a negative logic system

a. Must necessarily be positive
b. Must necessarily be negative
c. Could be negative or positive
d. Must necessarily be either zero or -5 V

Options :

1. ✖ a
2. ✖ b
3. ✔ c
4. ✖ d

Question Number : 26 Question Id : 6326 Question Type : MCQ Option Shuffling : No
Correct : 1.0 Wrong : 0.33

In a centre tap full wave rectifier, 100 V is the peak voltage between the centre tap and one of the secondary. What is the maximum voltage across the reverse biased diode?

a. 200 V
b. 141 V
c. 100V
d. 86 V

Options :

1. ✔ a
2. ✖ b
3. ✖ c

4. ✖ d

Question Number : 27 Question Id : 6327 Question Type : MCQ Option Shuffling : No Correct : 1.0 Wrong : 0.33

_____ has the greatest mobility.

a. Hole
b. Electron
c. Positive ion
d. Negative ion

Options :

1. ✖ a
2. ✔ b
3. ✖ c
4. ✖ d

Question Number : 28 Question Id : 6328 Question Type : MCQ Option Shuffling : No Correct : 1.0 Wrong : 0.33

The mean free path for electron drift.....with purity.

a. Increases
b. Decreases
c. First increases then decreases
d. Remain same

Options :

1. ✔ a
2. ✖ b
3. ✖ c
4. ✖ d

Question Number : 29 Question Id : 6329 Question Type : MCQ Option Shuffling : No Correct : 1.0 Wrong : 0.33

How many numbers of NOR are gates required to realize AND gate.

a. 2
b. 4
c. 3
d. 5

Options :

1. ✖ a
2. ✖ b
3. ✔ c
4. ✖ d

Question Number : 30 Question Id : 6330 Question Type : MCQ Option Shuffling : No Correct : 1.0 Wrong : 0.33

An npn transistor operated at I_c=5mA has a collector load resistor of 2 kilo ohms and its emitter is grounded. The voltage gain of this stage is about. Where V_T=25 V (npn)

a. 100
b. 400
c. 25
d. 10

Options :

1. ✖ a
2. ✔ b
3. ✖ c
4. ✖ d

Question Number : 31 Question Id : 6331 Question Type : MCQ Option Shuffling : No
Correct : 1.0 Wrong : 0.33

The mostly heavily doped region in a BJT is_____.

a. Collector
b. Emitter
c. Base
d. Both collector and base

Options :

1. ✖ a
2. ✔ b
3. ✖ c
4. ✖ d

Question Number : 32 Question Id : 6332 Question Type : MCQ Option Shuffling : No
Correct : 1.0 Wrong : 0.33

If all the transmission zeros of a network are at infinity then it is a

a. Low pass filter
b. High pass filter
c. Band pass filter
d. Band stop filter.

Options :

1. ✔ a
2. ✖ b
3. ✖ c
4. ✖ d

Question Number : 33 Question Id : 6333 Question Type : MCQ Option Shuffling : No
Correct : 1.0 Wrong : 0.33

In a 50% amplitude modulated signal, if the total transmitted power is P, then the carrier power will be

a. $\frac{1}{3}P$

b. $\frac{2}{3}P$

c. $\frac{2}{2.25}P$

d. $\frac{2}{2.5}P$

Options :

1. ✖ a

2. ✖ b

3. ✔ c

4. ✖ d

Question Number : 34 Question Id : 6334 Question Type : MCQ Option Shuffling : No
Correct : 1.0 Wrong : 0.33

In the inverting op-amp circuit shown in figure, the resistance R_2 is chose as $R_1||R_f$ in order to

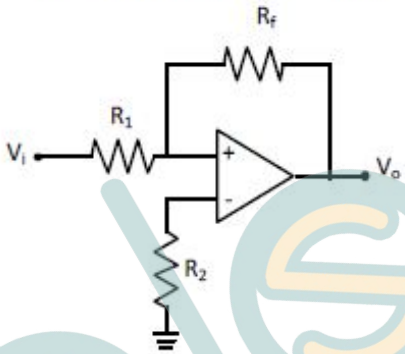

a. Increase CMRR

b. Increase gain

c. Reduce offset voltage

d. Reduce offset current

Options :

1. ✖ a

2. ✖ b

3. ✖ c

4. ✔ d

Question Number : 35 Question Id : 6335 Question Type : MCQ Option Shuffling : No
Correct : 1.0 Wrong : 0.33

Which of the following is not used as a supplementary cementitious material?

a. Fly ash

b. Gypsum

c. Rice husk ash

d. Silica fume

Options :

1. ✖ a

2. ✔ b

3. ✖ c
4. ✖ d

Question Number : 36 Question Id : 6336 Question Type : MCQ Option Shuffling : No
Correct : 1.0 Wrong : 0.33

According to IS 456, if the maximum aggregate size is increased from 20 mm to 40 mm, the minimum cement content requirement changes (in kg/cum) by

a. -20
b. 20
c. -30
d. 30

Options :
1. ✖ a
2. ✖ b
3. ✔ c
4. ✖ d

Question Number : 37 Question Id : 6337 Question Type : MCQ Option Shuffling : No
Correct : 1.0 Wrong : 0.33

A roof member directly supporting the roof covering or rafter and roof battens is called as

a. Truss
b. Beam
c. Strut
d. Purlin

Options :
1. ✖ a
2. ✖ b
3. ✖ c
4. ✔ d

Question Number : 38 Question Id : 6338 Question Type : MCQ Option Shuffling : No
Correct : 1.0 Wrong : 0.33

Which of the following is not used in the design of concrete mixes as per the relevant Indian standard?

a. Air content
b. Water content
c. Admixture content
d. Bulk density of cement

Options :
1. ✖ a
2. ✖ b
3. ✖ c
4. ✔ d

Question Number : 39 Question Id : 6339 Question Type : MCQ Option Shuffling : No
Correct : 1.0 Wrong : 0.33

The negative ratio of transverse to axial strain is called as

a. Young's modulus
b. Shear modulus
c. Poisson's ratio
d. Bulk modulus of elasticity

Options :
1. ✖ a
2. ✖ b
3. ✔ c
4. ✖ d

Question Number : 40 Question Id : 6340 Question Type : MCQ Option Shuffling : No
Correct : 1.0 Wrong : 0.33

The minimum time before striking the props to slabs (less than 4.5 m) as per IS 456 is

a. 14-day
b. 7-day
c. 3-day
d. 16-24 h

Options :
1. ✖ a
2. ✔ b
3. ✖ c
4. ✖ d

Question Number : 41 Question Id : 6341 Question Type : MCQ Option Shuffling : No
Correct : 1.0 Wrong : 0.33

The centre-to-centre distance between individual fasteners in a line, in the direction of load/ stress is called as

a. Camber
b. Pitch
c. Specific distance
d. Stress lag

Options :
1. ✖ a
2. ✔ b
3. ✖ c
4. ✖ d

Question Number : 42 Question Id : 6342 Question Type : MCQ Option Shuffling : No
Correct : 1.0 Wrong : 0.33

According to IS 1200, granular sub-base used in pavement construction shall be measured as finished work in position in

a. Tonnage
b. Square m of plan area
c. Cubic metres
d. Thickness of the layer

Options :

1. ✖ a
2. ✖ b
3. ✔ c
4. ✖ d

Question Number : 43 Question Id : 6343 Question Type : MCQ Option Shuffling : No
Correct : 1.0 Wrong : 0.33

In surveying, the horizontal angle which a line makes with the magnetic meridian is called as

a. Magnetic meridian
b. Grid meridian
c. Arbitrary meridian
d. Grid bearing

Options :

1. ✔ a
2. ✖ b
3. ✖ c
4. ✖ d

Question Number : 44 Question Id : 6344 Question Type : MCQ Option Shuffling : No
Correct : 1.0 Wrong : 0.33

A liquid forms an interface with another liquid or gas; the surface energy per unit area of the interface is known as

a. Surface tension
b. Specific energy
c. Specific heat
d. Suction energy

Options :

1. ✔ a
2. ✖ b
3. ✖ c
4. ✖ d

Question Number : 45 Question Id : 6345 Question Type : MCQ Option Shuffling : No
Correct : 1.0 Wrong : 0.33

The property of soil mass pertaining to its susceptibility to decrease in volume under pressure is known as

a. compactibility
b. shrinkage
c. compressibility
d. expansion

Options :

1. ✖ a
2. ✖ b
3. ✔ c
4. ✖ d

Question Number : 46 Question Id : 6346 Question Type : MCQ Option Shuffling : No
Correct : 1.0 Wrong : 0.33

According to Darcy's law, for laminar flow in a saturated soil, the rate of flow is proportional to the

a. Cross sectional area
b. Hydraulic gradient
c. Coefficient of permeability
d. Porosity of the soil

Options :

1. ✖ a
2. ✔ b
3. ✖ c
4. ✖ d

Question Number : 47 Question Id : 6347 Question Type : MCQ Option Shuffling : No
Correct : 1.0 Wrong : 0.33

The most efficient form of damping employed in electrical instruments is

a. Air friction
b. Fluid friction
c. Eddy currents
d. None of these

Options :

1. ✖ a
2. ✖ b
3. ✔ c
4. ✖ d

Question Number : 48 Question Id : 6348 Question Type : MCQ Option Shuffling : No
Correct : 1.0 Wrong : 0.33

Moving iron instruments can be used for

a. Direct current and voltages
b. Alternating current and voltages
c. Radio frequency current
d. Both a and b

Options :

1. ✖ a
2. ✖ b
3. ✖ c
4. ✔ d

Question Number : 49 Question Id : 6349 Question Type : MCQ Option Shuffling : No
Correct : 1.0 Wrong : 0.33

PMMC ammeter have uniform scale because

a. Of eddy current damping
b. They are spring controlled
c. Their deflecting torque varies directly as current
d. Both spring controlled and having deflecting torque varies directly as current

Options :

1. ✖ a
2. ✖ b
3. ✖ c
4. ✔ d

Question Number : 50 Question Id : 6350 Question Type : MCQ Option Shuffling : No
Correct : 1.0 Wrong : 0.33

The meter suitable for only DC measurement

a. Moving iron type
b. Permanent magnet type
c. Electrodynamics type
d. Hot wire type

Options :

1. ✖ a
2. ✔ b
3. ✖ c
4. ✖ d

Question Number : 51 Question Id : 6351 Question Type : MCQ Option Shuffling : No
Correct : 1.0 Wrong : 0.33

For the measurement of electrical energy, we may use a

a. Wattmeter
b. KWh meter
c. Multimeter
d. Voltmeter, ammeter and PF meter

Options :

1. ✖ a
2. ✔ b
3. ✖ c
4. ✖ d

Question Number : 52 Question Id : 6352 Question Type : MCQ Option Shuffling : No
Correct : 1.0 Wrong : 0.33

Identify the incorrect statement

a. The example of a grassland ecosystem is Grass-grasshopper-frog-snake-hawk

b. The example of a pond ecosystem is Phytoplankton-water fleas-small fish- tuna

c. The example of an arctic tundra ecosystem is Lichens-reindeer- man

d. The example of a mangrove ecosystem is Algae- crabs-small carnivorous fish- large carnivorous fish

Options :

1. ✖ a
2. ✖ b
3. ✖ c
4. ✔ d

Question Number : 53 Question Id : 6353 Question Type : MCQ Option Shuffling : No
Correct : 1.0 Wrong : 0.33

The water borne disease, cholera is transmitted by

a. entamoeba histolytica

b. salmonella typhae

c. vibrio comma

d. giardia lamblia

Options :

1. ✖ a
2. ✖ b
3. ✔ c
4. ✖ d

Question Number : 54 Question Id : 6354 Question Type : MCQ Option Shuffling : No
Correct : 1.0 Wrong : 0.33

The turbidity in surface water is due to presence of

a. dissolved organics

b. colloidal material

c. dissolved inorganics

d. dissolved colors

Options :

1. ✖ a

2. ✔ b
3. ✖ c
4. ✖ d

Question Number : 55 Question Id : 6355 Question Type : MCQ Option Shuffling : No
Correct : 1.0 Wrong : 0.33

Nitrous oxide is a

a. bad absorber of infrared radiations

b. good reflector of ultraviolet radiations

c. good absorber of ultraviolet radiations

d. good absorber of infrared radiations

Options :

1. ✖ a
2. ✖ b
3. ✖ c
4. ✔ d

Question Number : 56 Question Id : 6356 Question Type : MCQ Option Shuffling : No
Correct : 1.0 Wrong : 0.33

The prescribed permissible noise level, Leq for residential area at night time is

a. 45 dBA

b. 50 dBA

c. 40 dBA

d. 55 dBA

Options :

1. ✔ a
2. ✖ b
3. ✖ c
4. ✖ d

Question Number : 57 Question Id : 6357 Question Type : MCQ Option Shuffling : No
Correct : 1.0 Wrong : 0.33

The acid rain is basically caused due to formation of secondary pollutants such as

a. H_2SO_4, HCL and H_2CO_3

b. H_2SO_4, HNO_3 and H_2CO_3

c. H_2SO_4, HCL and HNO_3

d. H_2SO_4 and H_2CO_3

Options :

1. ✖ a
2. ✖ b
3. ✔ c
4. ✖ d

Question Number : 58 Question Id : 6358 Question Type : MCQ Option Shuffling : No
Correct : 1.0 Wrong : 0.33

Wi-Fi stands for

a. Wireless Fidelity

b. Wired Fidelity

c. Wireless Field

d. Wireless Finite

Options :

1. ✔ a
2. ✖ b
3. ✖ c
4. ✖ d

Question Number : 59 Question Id : 6359 Question Type : MCQ Option Shuffling : No
Correct : 1.0 Wrong : 0.33

UNIX is a _____

a. Real-time operating system

b. Single-user operating system

c. Multi-tasking operating system

d. Distributed operating system

Options :

1. ✖ a
2. ✖ b
3. ✔ c
4. ✖ d

Question Number : 60 Question Id : 6360 Question Type : MCQ Option Shuffling : No
Correct : 1.0 Wrong : 0.33

Considering 2's complement representation for negative numbers, -86 will be stored into an 8-bit memory space as

a. 10101010

b. 11000111

c. 10111000

d. 11101101

Options :

1. ✔ a
2. ✖ b
3. ✖ c
4. ✖ d

Question Number : 61 Question Id : 6361 Question Type : MCQ Option Shuffling : No

Correct : 1.0 Wrong : 0.33

Considering X and Y as binary variables, the equivalent Boolean expression for X(X + Y) is

a. X

b. Y

c. XY

d. X + Y

Options :

1. ✔ a
2. ✖ b
3. ✖ c
4. ✖ d

Question Number : 62 Question Id : 6362 Question Type : MCQ Option Shuffling : No
Correct : 1.0 Wrong : 0.33

'C++' is a _____

a. Low-level programming language

b. High-level programming language

c. Assembly language

d. Machine language

Options :

1. ✖ a
2. ✔ b
3. ✖ c
4. ✖ d

Question Number : 63 Question Id : 6363 Question Type : MCQ Option Shuffling : No
Correct : 1.0 Wrong : 0.33

Which of the following statements about High-Level language is correct?

a. High-Level language is machine dependent

b. High-Level language is machine independent

c. High-Level language is difficult than Assembly language to write programs

d. High-level language programs require Assembler

Options :

1. ✖ a
2. ✔ b
3. ✖ c
4. ✖ d

Question Number : 64 Question Id : 6364 Question Type : MCQ Option Shuffling : No
Correct : 1.0 Wrong : 0.33

World Wide Web (WWW) was invented by

a. Bill Gates

b. Steve Jobs

c. Tim Berners-Lee

d. Alan Turing

Options :

1. ✖ a
2. ✖ b
3. ✔ c
4. ✖ d

Question Number : 65 Question Id : 6365 Question Type : MCQ Option Shuffling : No
Correct : 1.0 Wrong : 0.33

Which of the following is not a 'overwrite' virus?

a. Trj.Reboot

b. Meve

c. Way

d. Trivial.88.D

Options :

1. ✖ a
2. ✔ b
3. ✖ c
4. ✖ d

Question Number : 66 Question Id : 6366 Question Type : MCQ Option Shuffling : No
Correct : 1.0 Wrong : 0.33

Which of the following is not a valid unit to represent the speed of CPU?

a. Hertz (Hz)

b. MIPS

c. MFLOPS

d. Byte

Options :

1. ✖ a
2. ✖ b
3. ✖ c
4. ✔ d

Question Number : 67 Question Id : 6367 Question Type : MCQ Option Shuffling : No
Correct : 1.0 Wrong : 0.33

The 2's compliment of the binary number $(00111100)_2$ is

a. $(11000100)_2$

b. $(11000011)_2$

c. $(00110000)_2$

d. $(11110100)_2$

Options :

1. ✔ a
2. ✖ b
3. ✖ c
4. ✖ d

Question Number : 68 Question Id : 6368 Question Type : MCQ Option Shuffling : No
Correct : 1.0 Wrong : 0.33

A map of 12 cm x10 cm represents an area of 75000 square Meter of a field. The R. F. Of the scale is

a. 1/625 b. 1/250 c. 1/2500 d. 1/6250000

Options :

1. ✖ a
2. ✖ b
3. ✔ c
4. ✖ d

Question Number : 69 Question Id : 6369 Question Type : MCQ Option Shuffling : No
Correct : 1.0 Wrong : 0.33

The curve traced by a point on straight line which rolls without slipping on a circle, is called

a. hypocycloid b. involute c. epicycloids d. cycloid

Options :

1. ✖ a
2. ✔ b
3. ✖ c
4. ✖ d

Question Number : 70 Question Id : 6370 Question Type : MCQ Option Shuffling : No
Correct : 1.0 Wrong : 0.33

The point at which line intersects the V.P., if extended, is known as

a. Auxiliary trace b. Horizontal trace

c. Profile trace d. Vertical trace

Options :

1. ✖ a
2. ✖ b
3. ✖ c
4. ✔ d

Question Number : 71 Question Id : 6371 Question Type : MCQ Option Shuffling : No
Correct : 1.0 Wrong : 0.33

Projection of an object shown by three views is known as

a. Oblique b. Perspective

c. Orthographic d. Isometric

Options :

1. ✖ a
2. ✖ b
3. ✔ c
4. ✖ d

Question Number : 72 Question Id : 6372 Question Type : MCQ Option Shuffling : No
Correct : 1.0 Wrong : 0.33

In comparison to an isometric projection, the appearance of an isometric view is

a. more accurate

b. more realistic

c. smaller

d. larger

Options :

1. ✖ a
2. ✖ b
3. ✖ c
4. ✔ d

Question Number : 73 Question Id : 6373 Question Type : MCQ Option Shuffling : No
Correct : 1.0 Wrong : 0.33

Alka is standing in a lift. The force exerted by the floor of the lift on the Alka's foot is more than the weight of Alka if the lift is

a. moving upward with increasing speed
b. moving upward with decreasing speed
c. moving downward with increasing speed
d. moving upward with constant speed.

Options :

1. ✔ a
2. ✖ b
3. ✖ c
4. ✖ d

Question Number : 74 Question Id : 6374 Question Type : MCQ Option Shuffling : No
Correct : 1.0 Wrong : 0.33

For an orbiting satellite, in magnitude

a. the kinetic energy is equal to the potential energy
b. the kinetic energy is twice the potential energy
c. the kinetic energy is half the potential energy
d. the kinetic energy is one –fourth the potential energy .

Options :

1. ✖ a
2. ✖ b
3. ✔ c
4. ✖ d

Question Number : 75 Question Id : 6375 Question Type : MCQ Option Shuffling : No
Correct : 1.0 Wrong : 0.33

An object of mass m_1 collides with a stationary object of mass m_2. The collision is elastic. There is complete transfer of kinetic energy if

a. $m_1 = m_2$
b. $m_1 \gg m_2$
c. $m_1 \ll m_2$
d. the masses stick together.

Options :

1. ✔ a
2. ✖ b
3. ✖ c
4. ✖ d

Question Number : 76 Question Id : 6376 Question Type : MCQ Option Shuffling : No
Correct : 1.0 Wrong : 0.33

Which one of the following represents a standing wave?

a. $y(x,t) = 4.7 \sin(5x - 0.4t)$
b. $y(x,t) = 8.2 \sin(2x - t)$
c. $y(x,t) = 5.6 \cos 0.5(t - x/2.4)$
d. $y(x,t) = 4 \cos(3x) \sin(11t)$.

Options :

1. ✖ a
2. ✖ b
3. ✖ c
4. ✔ d

Question Number : 77 Question Id : 6377 Question Type : MCQ Option Shuffling : No
Correct : 1.0 Wrong : 0.33

Two identical thin convex lenses of same power P are placed in contact so that their optic axes coincide. The net power of the combination is

a. P
b. 2 P
c. P/2
d. P/4.

Options :

1. ✖ a
2. ✔ b
3. ✖ c
4. ✖ d

Question Number : 78 Question Id : 6378 Question Type : MCQ Option Shuffling : No
Correct : 1.0 Wrong : 0.33

Which one of following is not a force?

a. Electric Force
b. Gravity
c. Friction
d. Electromotive force.

Options :

1. ✖ a
2. ✖ b
3. ✖ c
4. ✔ d

Question Number : 79 Question Id : 6379 Question Type : MCQ Option Shuffling : No
Correct : 1.0 Wrong : 0.33

In an industrial area, a sample of 10 litres of air was found to contain 5 mL of sulphur dioxide gas. The concentration of sulphur dioxide gas in air in ppm is

a. 300
b. 400
c. 500
d. 600

Options :

1. ✖ a
2. ✖ b
3. ✔ c
4. ✖ d

Question Number : 80 Question Id : 6380 Question Type : MCQ Option Shuffling : No
Correct : 1.0 Wrong : 0.33

For the reaction $2NO_2(g) \rightleftharpoons N_2O_4(g) + 60kj$, an increase in temperature will

a. favour the decomposition of N_2O_4

b. favour the formation of N_2O_4

c. result in the formation of a different reaction product

d. stop the reaction.

Options :

1. ✔ a
2. ✖ b
3. ✖ c
4. ✖ d

Question Number : 81 Question Id : 6381 Question Type : MCQ Option Shuffling : No
Correct : 1.0 Wrong : 0.33

Which one of the following is a correct order of increasing electronegativity of elements?

a. N > P > O > F
b. F > O > N > P
c. F > N > P > O
d. O > P > N > F

Options :

1. ✖ a
2. ✔ b
3. ✖ c
4. ✖ d

Question Number : 82 Question Id : 6382 Question Type : MCQ Option Shuffling : No
Correct : 1.0 Wrong : 0.33

The major product formed by treating n- butyl chloride with boiling solution of potassium hydroxide in ethanol is

a. 2- Butene
b. 1- Butene
c. n- Butanol
d. Isobutanol

Options :

1. ✔ a
2. ✖ b
3. ✖ c
4. ✖ d

Question Number : 83 Question Id : 6383 Question Type : MCQ Option Shuffling : No
Correct : 1.0 Wrong : 0.33

Which one of the following aldehydes will not undergo aldol condensation when treated with an aqueous solution of sodium hydroxide?

a. $C_6H_5CH_2CHO$
b. CH_3CH_2CHO
c. CH_3CHO
d. HCHO

Options :

1. ✖ a
2. ✖ b
3. ✖ c
4. ✔ d

Question Number : 84 Question Id : 6384 Question Type : MCQ Option Shuffling : No
Correct : 1.0 Wrong : 0.33

Which one of the following electronic configuration represents a transition element in its ground state?

a. $3d^3\ 4s^2$
b. $2p^6\ 3s^1$
c. $2s^2 2p^6$
d. $3d^{10}\ 4s^2$

Options :

1. ✔ a
2. ✖ b
3. ✖ c
4. ✖ d

Question Number : 85 Question Id : 6385 Question Type : MCQ Option Shuffling : No
Correct : 1.0 Wrong : 0.33

Which one of the following does not belong to the same class as others

a. Cat b. Tiger c. Lizard d. Mouse

Options :

1. ✖ a
2. ✖ b
3. ✔ c
4. ✖ d

Question Number : 86 Question Id : 6386 Question Type : MCQ Option Shuffling : No
Correct : 1.0 Wrong : 0.33

A broad leaved plant was kept in a room with tube lights on. Will it carry out photosynthesis?

a. No, because plants photosynthesize only in sunlight

b. No, because plants grow and survive only outdoors

c. Yes, because its leaves were broad and big

d. Yes, because its gets light for photosynthesis from the tube light

Options :

1. ✖ a
2. ✖ b
3. ✖ c
4. ✔ d

Question Number : 87 Question Id : 6387 Question Type : MCQ Option Shuffling : No
Correct : 1.0 Wrong : 0.33

Choose the combination of statements which increase fertility of a field and crop yield

i) Use seeds of good quality

ii) Grow leguminous crops between other crops

iii) Prepare soil before sowing

iv) Water them twenty four hours

a. (i) and (ii)

b. (i), (ii) and (iii)

c. (i), (ii), (iii) and (iv)

d. (ii), (iii) and (iv)

Options :

1. ✖ a
2. ✔ b
3. ✖ c
4. ✖ d

Question Number : 88 Question Id : 6388 Question Type : MCQ Option Shuffling : No
Correct : 1.0 Wrong : 0.33

Which living beings are made of one cell and contain one DNA molecule. Some of them are useful to humans and some disease causing?

a. Amoebae

b. Bacteria

c. Fungi

d. Plants

Options :

1. ✖ a
2. ✔ b
3. ✖ c
4. ✖ d

Question Number : 89 Question Id : 6389 Question Type : MCQ Option Shuffling : No
Correct : 1.0 Wrong : 0.33

Alimentary canal is

a. long and tube-like with organs that digest food in animals

b. the long tube within plants through which water moves up

c. the canal system of sponges

d. tube through which eggs are laid by animals

Options :

1. ✔ a
2. ✖ b
3. ✖ c
4. ✖ d

Question Number : 90 Question Id : 6390 Question Type : MCQ Option Shuffling : No
Correct : 1.0 Wrong : 0.33

Mushrooms are

a. Plants

b. Fungi

c. Animals

d. Protozoa

Options :

1. ✖ a
2. ✔ b
3. ✖ c
4. ✖ d

Question Number : 91 Question Id : 6391 Question Type : MCQ Option Shuffling : No
Correct : 1.0 Wrong : 0.33

Let x be the least number which on being divided by 5,6,8,9,12 leaves in each case a remainder 1 but exactly divisible by 13. The Sum of digits of x is

a. 8

b. 9

c. 10

d. 12

Options :

1. ✖ a
2. ✖ b
3. ✔ c
4. ✖ d

Question Number : 92 Question Id : 6392 Question Type : MCQ Option Shuffling : No
Correct : 1.0 Wrong : 0.33

Let $a=2^{55} \times 3^{23} \times 7^{78}$, $b=2^{53} \times 3^{26} \times 7^{78}$

$C=2^{53} \times 3^{23} \times 7^{80}$, and $d=2^{53} \times 3^{24} \times 7^{79}$

HCF of a, b, c and d is

a. $2^{55} \times 3^{23} \times 7^{78}$

b. $2^{53} \times 3^{23} \times 7^{78}$

c. $2^{53} \times 3^{23} \times 7^{80}$

d. $2^{54} \times 3^{23} \times 7^{78}$

Options :

1. ✖ a
2. ✔ b
3. ✖ c
4. ✖ d

Question Number : 93 Question Id : 6393 Question Type : MCQ Option Shuffling : No
Correct : 1.0 Wrong : 0.33

A person saves 25% of his income. Now his income increases by 20% and his expenditure increase by 10%. His percentage increase in savings is

a. 30

b. 40

c. 50

d. 60

Options :

1. ✖ a
2. ✖ b
3. ✔ c
4. ✖ d

Question Number : 94 Question Id : 6394 Question Type : MCQ Option Shuffling : No
Correct : 1.0 Wrong : 0.33

If A:B=2:3, B:C=5:6 and C:D 8:9, then A: D is

a. 2: 9

b. 20 : 81

c. 20: 27

d. 40 : 81

Options :

1. ✖ a
2. ✖ b
3. ✖ c
4. ✔ d

Question Number : 95 Question Id : 6395 Question Type : MCQ Option Shuffling : No
Correct : 1.0 Wrong : 0.33

At the beginning of a term, the ratio of the number of students in a school under 12 years to those who are 12 years and above was 5:4. At the end of the term, the ratio was 4:5 as 30 students had reached the age of 12 during the term. If no student left or was admitted during the term, the total number of students in the school was

a. 180

b. 360

c. 270

d. 540

Options :

1. ✖ a
2. ✖ b
3. ✔ c

4. ✖ d

Question Number : 96 Question Id : 6396 Question Type : MCQ Option Shuffling : No
Correct : 1.0 Wrong : 0.33

Two alloys A and B contain zinc and copper in the ratio 1:2 and 3:2 respectively. If 6 kg of A and 7.5 kg of B are melted to form a third alloy C, then the percentage of copper in C will be closest to

a. 50

b. 49.15

c. 51.85

d. 52

Options :

1. ✖ a
2. ✖ b
3. ✔ c
4. ✖ d

Question Number : 97 Question Id : 6397 Question Type : MCQ Option Shuffling : No
Correct : 1.0 Wrong : 0.33

Two identical jars are full of solutions of acid and water. The solution of one jar contains 50 % acid whereas solution of other jar contains $33\frac{1}{3}$% water. The contents of three jars are emptied into a third jar and mixed. The ratio of water to acid in the third jar is

a. 5:7

b. 7:5

c. 3:2

d. 2:3

Options :

1. ✔ a
2. ✖ b
3. ✖ c
4. ✖ d

Question Number : 98 Question Id : 6398 Question Type : MCQ Option Shuffling : No
Correct : 1.0 Wrong : 0.33

A computer is available for Rs.22750 cash payment or for Rs.6200 cash down payment and three equal annual installments of Rs. x. If the interest charged is 10% per annum. Compounded annually, the valve of x is

a. 5517

b. 5578

c. 6565

d. 6655

Options :

1. ✖ a
2. ✖ b
3. ✖ c
4. ✔ d

Question Number : 99 Question Id : 6399 Question Type : MCQ Option Shuffling : No
Correct : 1.0 Wrong : 0.33

A sum of money at simple interest amounts to Rs.13800 in 3 years . If rate of interest is increased by 30%,the same sum amounts to Rs.14340 in the same time. The rate of interest per annum is

a. 3%

b. 4%

c. 5%

d. 8%

Options :

1. ✖ a
2. ✖ b
3. ✔ c
4. ✖ d

Question Number : 100 Question Id : 6400 Question Type : MCQ Option Shuffling : No
Correct : 1.0 Wrong : 0.33

A trader bought 864 articles and sold 800 of them for the price he paid for 864 article . He Sold the remaining articles at the same price per article as the other 800. The percentage gain on entire transaction is

a. $7\frac{1}{2}\%$

b. 8%

c. $8\frac{1}{2}\%$

d. 9%

Options :

1. ✖ a

2. ✔ b
3. ✖ c
4. ✖ d

Question Number : 101 Question Id : 6401 Question Type : MCQ Option Shuffling : No
Correct : 1.0 Wrong : 0.33

Ankit purchased an article for Rs.600 and sold it at the gain of 30 % . From that amount, he purchased another article and sold it at a loss of 30% . In the entire transaction he has a

a. Loss of 9%

b. Gain of 9%

c. Loss of 6.9 %

d. Gain of 6.9%

Options :
1. ✔ a
2. ✖ b
3. ✖ c
4. ✖ d

Question Number : 102 Question Id : 6402 Question Type : MCQ Option Shuffling : No
Correct : 1.0 Wrong : 0.33

Two places A and B are 220 km apart on a highway. Hari starts from A and Juhi from B at the same time on the same day using cars. If they travel in the same direction (A to B), they meet in $5\frac{1}{2}$ hours, but in 2 hours 45 minutes when travelling towards each other. Speed of the car of Juhi, in km/hour, is

a. 20

b. 30

c. 50

d. 60

Options :
1. ✔ a
2. ✖ b
3. ✖ c
4. ✖ d

Question Number : 103 Question Id : 6403 Question Type : MCQ Option Shuffling : No
Correct : 1.0 Wrong : 0.33

A covers a certain distance in a certain time, if B covers half of this distance in the double time, the ratio of speeds of A and B is

a. 2:1

b. 4:1

c. 1:2

d. 1:4

Options :

1. ✖ a
2. ✔ b
3. ✖ c
4. ✖ d

Question Number : 104 Question Id : 6404 Question Type : MCQ Option Shuffling : No
Correct : 1.0 Wrong : 0.33

Two pipes A and B running together can fill a cistern in $6\frac{2}{3}$ minutes. Pipe B takes 3 minutes more than A to fill it . The time, in minutes , taken by B alone to fill the cistern is

a. 15

b. 16

c. 18

d. 12

Options :

1. ✔ a
2. ✖ b
3. ✖ c
4. ✖ d

Question Number : 105 Question Id : 6405 Question Type : MCQ Option Shuffling : No
Correct : 1.0 Wrong : 0.33

2 men and 7 women complete a work in 14 days, while 3 men and 8 women complete the same work in 11days. In how many days will 8 men and 6 women complete 3 times of this work ?

a. 14

b. 21

c. 24

d. 28

Options :

1. ✖ a
2. ✔ b
3. ✖ c

4. ✖ d

Question Number : 106 Question Id : 6406 Question Type : MCQ Option Shuffling : No
Correct : 1.0 Wrong : 0.33

In a mathematics test in a class the average score of boys is 33 and that of girls is 42. If the average score of all the students in the class is 38, then what is the percentage of girls in the class?

a. $44\frac{4}{9}$

b. $46\frac{5}{9}$

c. $55\frac{5}{9}$

d. $55\frac{4}{9}$

Options :

1. ✖ a
2. ✖ b
3. ✔ c
4. ✖ d

Question Number : 107 Question Id : 6407 Question Type : MCQ Option Shuffling : No
Correct : 1.0 Wrong : 0.33

Dewan travels in a car and covers 20% of his journey with 80 km/hour, $\frac{2}{5}$ th part of journey with 60 km/hour and rest at 40 km/hour .His average speed during the entire journey, in km/hour,is approximately

a. 50

b. 52

c. 60

d. 62

Options :

1. ✖ a
2. ✔ b
3. ✖ c
4. ✖ d

Question Number : 108 Question Id : 6408 Question Type : MCQ Option Shuffling : No
Correct : 1.0 Wrong : 0.33

If α and β are the roots of $2x^2+3x-5=0$, then the value of $(\beta-1)(\alpha-1)+|\alpha-\beta|$ is

a. 0

b. $\frac{-3}{2}$

c. $\frac{5}{2}$

d. $\frac{7}{2}$

Options :

1. ✖ a
2. ✖ b
3. ✖ c
4. ✔ d

Question Number : 109 Question Id : 6409 Question Type : MCQ Option Shuffling : No
Correct : 1.0 Wrong : 0.33

If α and β are the root of the equation $\frac{1010}{991}x+1+\frac{1}{x}=0$, then the value of $\frac{1}{\alpha}+\frac{1}{\beta}$ is

a. $\frac{-991}{1010}$

b. -1

c. $\frac{1000}{991}$

d. 1

Options :

1. ✖ a
2. ✔ b
3. ✖ c
4. ✖ d

Question Number : 110 Question Id : 6410 Question Type : MCQ Option Shuffling : No
Correct : 1.0 Wrong : 0.33

$(a+b)^3+(b+c)^3+(c+a)^3-3(a-b)(b-c)(c+a)$ is factored as

a. $(a+b+c)(a^2+b^2+c^2+ab-bc-ca)$

b. $2(a+b+c)(a^2+b^2+c^2-ab-bc-ca)$

c. $3(a+b+c)(a^2+b^2+c^2-ab-bc-ca)$

d. $3(a+b+c)(a^2+b^2+c^2+ab-bc-ca)$

Options :

1. ✖ a
2. ✔ b
3. ✖ c
4. ✖ d

Question Number : 111 Question Id : 6411 Question Type : MCQ Option Shuffling : No
Correct : 1.0 Wrong : 0.33

Which one of the following is not a factor of $x^3+2x^2-9x-18$?

a. x-3

b. x-2

c. x+2

d. x+3

Options :

1. ✖ a
2. ✔ b
3. ✖ c
4. ✖ d

Question Number : 112 Question Id : 6412 Question Type : MCQ Option Shuffling : No
Correct : 1.0 Wrong : 0.33

Let $a_1, a_2, a_3, \ldots\ldots\ldots$ be an arithmetic progression.

If $\sum_{i=1}^{100} a_i = 100, \sum_{i=101}^{200} a_i = 200$, then

the common difference of the progression is

a. 1

b. $\frac{1}{10}$

c. $\frac{1}{100}$

d. $\frac{1}{1000}$

Options :

1. ✖ a
2. ✖ b
3. ✔ c
4. ✖ d

Question Number : 113 Question Id : 6413 Question Type : MCQ Option Shuffling : No
Correct : 1.0 Wrong : 0.33

The sum to infinity of the series:

$\frac{1}{5}+\frac{1}{7}+\frac{1}{5^2}+\frac{1}{7^2}+\frac{1}{5^3}+\frac{1}{7^3}+\ldots\ldots\ldots$ is

a. $\frac{1}{4}$

b. $\frac{1}{6}$

c. $\frac{5}{12}$

d. $\frac{7}{12}$

Options :

1. ✖ a

2. ✖ b
3. ✔ c
4. ✖ d

Question Number : 114 Question Id : 6414 Question Type : MCQ Option Shuffling : No
Correct : 1.0 Wrong : 0.33

If $3\sin\theta+4\cos\theta=5$,then the value of $4\sin\theta - 3\cos\theta$ is

a. -5

b. -2

c. 1

d. 0

Options :
1. ✖ a
2. ✖ b
3. ✖ c
4. ✔ d

Question Number : 115 Question Id : 6415 Question Type : MCQ Option Shuffling : No
Correct : 1.0 Wrong : 0.33

From the top of a tower 50 m high the angles of depression of the top and bottom of a pole are found to be 45^0 and 60^0 respectively. The height of the pole, in metre , is

a. $50(\sqrt{3}-1)$

b. $50(\sqrt{3}+1)$

c. $50(3-\sqrt{3})$

d. $50(\sqrt{3}-1)$

Options :
1. ✖ a
2. ✖ b
3. ✔ c
4. ✖ d

Question Number : 116 Question Id : 6416 Question Type : MCQ Option Shuffling : No
Correct : 1.0 Wrong : 0.33

Where is rock art found in Central India?

a. Ujjain

b. Chanderi

c. Lakhudiyar

d. Bhimbetka

Options :

1. ✖ a
2. ✖ b
3. ✖ c
4. ✔ d

Question Number : 117 Question Id : 6417 Question Type : MCQ Option Shuffling : No
Correct : 1.0 Wrong : 0.33

What were the advantages that the Gupta period had because of which it is considered the Golden age of Ancient India?

a. Many Gold mines and access to the coastal trading areas of Eastern India.
b. Near Iron ore areas of Central India and South Bihar and the Byzantine trade route
c. Fertile agricultural land and growth of revenue from religions towns.
d. Increase in population and more artisans who would produce cloth for trade.

Options :
1. ✖ a
2. ✔ b
3. ✖ c
4. ✖ d

Question Number : 118 Question Id : 6418 Question Type : MCQ Option Shuffling : No
Correct : 1.0 Wrong : 0.33

" In the democracy which I have envisaged, a democracy established by non-violence, there will be equal freedom for all. Everybody will be his own master. It is to join a struggle for such democracy that I invite you today." Mahatma Gandhi

For starting which movement were the above lines spoken ?

a. Quit India
b. Home rule
c. Non Cooperation Movement
d. Khilafat

Options :
1. ✔ a
2. ✖ b
3. ✖ c
4. ✖ d

Question Number : 119 Question Id : 6419 Question Type : MCQ Option Shuffling : No
Correct : 1.0 Wrong : 0.33

What will happen to the hard rock when the softer rock below is eroded?

a. Hard rocks will collapse and the path of the river will deepen

b. Broken Hard rock will form an obstruction the waterfall

c. A plunge pool will be formed by hydraulic action

d. Waterfall will slowly give way to the valley of the river.

Options :

1. ✖ a
2. ✖ b
3. ✔ c
4. ✖ d

Question Number : 120 Question Id : 6420 Question Type : MCQ Option Shuffling : No
Correct : 1.0 Wrong : 0.33

Which region of India does the intensity of Arabian sea cyclones affect most ?

a. Rann of Kutch

b. Gulf of Khambhat

c. Indus Delta

d. Narmada Estuary

Options :

1. ✖ a
2. ✔ b
3. ✖ c
4. ✖ d

Question Number : 121 Question Id : 6421 Question Type : MCQ Option Shuffling : No
Correct : 1.0 Wrong : 0.33

Which aspect would need regulation if there is more Foreign Direct Investment in horticulture?

a. Consumption of water and rights of farmers to water

b. Soil conservation , and renewal using natural processes

c. Subsidy to farmers, for spending time away from their farms

d. Education of farmers on advantages of growing other crops

Options :

1. ✔ a
2. ✖ b
3. ✖ c
4. ✖ d

Question Number : 122 Question Id : 6422 Question Type : MCQ Option Shuffling : No
Correct : 1.0 Wrong : 0.33

In a survey during 2009-2010 reveals that none of the female workers were found engaged as 'carpenters', 'blacksmiths', 'cobblers', 'masons' or 'tractor drivers' and hence no wage rate was reported for these occupations during the year 2009-10

Which aspect of the Constitution could stand violated in this situation .

a. Right to Education

b. Right to equal wages

c. Right to Equality

d. Right to work

Options :

1. ✖ a
2. ✖ b
3. ✔ c
4. ✖ d

Question Number : 123 Question Id : 6423 Question Type : MCQ Option Shuffling : No
Correct : 1.0 Wrong : 0.33

Which one is a fundamental Duty ?

a. Settling all border and international disputes peacefully

b. Establishing facilities' for the development of agriculture.

c. Setting up cottage industries in rural areas for self employment.

d. Safeguarding the sovereignty, integrity and unity of India .

Options :

1. ✖ a
2. ✖ b
3. ✖ c
4. ✔ d

Question Number : 124 Question Id : 6424 Question Type : MCQ Option Shuffling : No
Correct : 1.0 Wrong : 0.33

What information does the Gross Domestic Product not show?

a. Contribution of industry towards the national Income

b. Expenditure on goods and services by the government

c. Income distribution across different sections of the population.

d. Purchasing power of the people in a country.

Options :

1. ✖ a
2. ✖ b
3. ✔ c
4. ✖ d

Question Number : 125 Question Id : 6425 Question Type : MCQ Option Shuffling : No
Correct : 1.0 Wrong : 0.33

What is the main problem faced in the use of solar panels for the production of power ?

a. Not enough sunshine

b. Poor storage batteries

c. High cost

d. Keeping fragile panels safe.

Options :

1. ✖ a
2. ✖ b
3. ✖ c
4. ✔ d

Question Number : 126 Question Id : 6426 Question Type : MCQ Option Shuffling : No
Correct : 1.0 Wrong : 0.33

How do e- commerce ventures build up trust of the buyers in their goods?

a. Cash on delivery facility

b. Ensure a flexible return policy

c. Better advertising

d. Prompt delivery

Options :

1. ✖ a
2. ✔ b
3. ✖ c
4. ✖ d

Question Number : 127 Question Id : 6427 Question Type : MCQ Option Shuffling : No
Correct : 1.0 Wrong : 0.33

What was the mascot for the Commonwealth Games held in India in 2010?

a. Bison

b. Peacock

c. Deer

d. Tiger

Options :

1. ✖ a
2. ✖ b
3. ✖ c
4. ✔ d

Question Number : 128 Question Id : 6428 Question Type : MCQ Option Shuffling : No
Correct : 1.0 Wrong : 0.33

For the 2016 Olympics, which team defeated the Men's Indian Hockey team to secure the place?

a. France

b. Germany

c. England

d. Italy

Options :

1. ✖ a
2. ✖ b
3. ✔ c
4. ✖ d

Question Number : 129 Question Id : 6429 Question Type : MCQ Option Shuffling : No
Correct : 1.0 Wrong : 0.33

What is the main consideration of China in reviving the New Silk Route?

a. Countering the IMF policies .

b. Being equal to the U.S.A as an economic power,

c. Constitution of an Asian Trade bloc.

d. Helping neighboring countries develop

Options :

1. ✖ a

2. ✖ b
3. ✔ c
4. ✖ d

Question Number : 130 Question Id : 6430 Question Type : MCQ Option Shuffling : No Correct : 1.0 Wrong : 0.33

Which of the following issues is a priority for Smart Cities to address?

a. Removal of old buildings and improvement of areas.

b. Increase in office space and inclusion of industries.

c. Increasing ICT connectivity and use for work .

d. Reduction in traffic congestion and clean energy.

Options :

1. ✖ a
2. ✖ b
3. ✖ c
4. ✔ d

Question Number : 131 Question Id : 6431 Question Type : MCQ Option Shuffling : No Correct : 1.0 Wrong : 0.33

In which city of India is the Agency for Remote sensing located?

a. Sriharikota

b. Hyderabad

c. Bengaluru

d. Thiruvananthapuram

Options :

1. ✖ a
2. ✔ b
3. ✖ c
4. ✖ d

Question Number : 132 Question Id : 6432 Question Type : MCQ Option Shuffling : No Correct : 1.0 Wrong : 0.33

What is the minimum distance at which an echo can be heard?

a. 25 metres

b. 17 metres

c. 60 meters

d. 30 meters

Options :

1. ✖ a
2. ✔ b
3. ✖ c
4. ✖ d

Question Number : 133 Question Id : 6433 Question Type : MCQ Option Shuffling : No
Correct : 1.0 Wrong : 0.33

The working of a jet engine is based on

a. Laws of Air pressure

b. Principle of Archimedes

c. Theory of Relativity

d. Newton's law of action and reaction

Options :

1. ✖ a
2. ✖ b
3. ✖ c
4. ✔ d

Question Number : 134 Question Id : 6434 Question Type : MCQ Option Shuffling : No
Correct : 1.0 Wrong : 0.33

What effect does the rotation of the Earth have on the wind system?

a. Winds do not rise above 100 kms near the Equator

b. Ocean currents carry the wind in the direction they flow in

c. Winds are deflected to the right of their course in the northern Hemisphere

d. Ocean currents are faster flowing east ward.

Options :

1. ✖ a
2. ✖ b
3. ✔ c
4. ✖ d

Question Number : 135 Question Id : 6435 Question Type : MCQ Option Shuffling : No
Correct : 1.0 Wrong : 0.33

What is the major component of Honey?

a. Fructose

b. Sucrose

c. Maltose

d. Glucose

Options :

1. ✔ a
2. ✖ b
3. ✖ c
4. ✖ d

Question Number : 136 Question Id : 6436 Question Type : MCQ Option Shuffling : No
Correct : 1.0 Wrong : 0.33

One of the direct effects of the depletion of the ozone layer on human beings is

a. More asthmatic cases

b. More cases of eye cataracts

c. More cases of diabetes.

d. More intestinal disorders

Options :

1. ✖ a
2. ✔ b
3. ✖ c
4. ✖ d

Question Number : 137 Question Id : 6437 Question Type : MCQ Option Shuffling : No
Correct : 1.0 Wrong : 0.33

Water pollution in rivers is measured by the dissolved amount of

a. Ozone

b. Chlorine

c. Oxygen.

d. Nitrogen

Options :

1. ✖ a
2. ✖ b
3. ✖ c
4. ✔ d

Question Number : 138 Question Id : 6438 Question Type : MCQ Option Shuffling : No
Correct : 1.0 Wrong : 0.33

What is the use of Monocytes in our blood ?

a. Increase the red blood cells

b. Help to absorb oxygen in the blood

c. Destroy the old, damaged cells

d. Increase the immune level of the body.

Options :

1. ✖ a
2. ✖ b
3. ✔ c
4. ✖ d

Question Number : 139 Question Id : 6439 Question Type : MCQ Option Shuffling : No
Correct : 1.0 Wrong : 0.33

What are the minerals and metals found in banana?

a. Manganese, Iron, Copper.

b. Copper, Iron, Zinc.

c. Manganese, Lead, Zinc.

d. Iron, Copper, .Magnesium.

Options :

1. ✔ a
2. ✖ b
3. ✖ c
4. ✖ d

Question Number : 140 Question Id : 6440 Question Type : MCQ Option Shuffling : No
Correct : 1.0 Wrong : 0.33

Which mineral helps in absorbing oxygen in the blood?

a. Iron

b. Calcium

c. Potassium

d. Zinc

Options :

1. ✔ a
2. ✖ b

3. ✖ c
4. ✖ d

Question Number : 141 Question Id : 6441 Question Type : MCQ Option Shuffling : No
Correct : 1.0 Wrong : 0.33

Pointing to a photograph, a lady told Sumit, "I am the only daughter of this man and his son is your maternal uncle." How is the lady related to Sumit's father?

a. Sister-in-law b. Sister c. Mother d. Wife

Options :
1. ✖ a
2. ✖ b
3. ✖ c
4. ✔ d

Question Number : 142 Question Id : 6442 Question Type : MCQ Option Shuffling : No
Correct : 1.0 Wrong : 0.33

Three of the four number-pairs in the alternatives have numbers which hold the same relationship as the numbers in the number-pair given below. Find out the number-pair in which the two numbers do not hold the same relationship as the two numbers in the number-pair below.

14 : 6

a. 20 : 9 b. 9 : 4 c. 28 : 13 d. 50 : 24

Options :
1. ✖ a
2. ✔ b
3. ✖ c
4. ✖ d

Question Number : 143 Question Id : 6443 Question Type : MCQ Option Shuffling : No
Correct : 1.0 Wrong : 0.33

'Lend' is related to 'Borrow' in the same way as 'Friendly' is related to:

a. Hatred b. Cooperative c. Hostile d. Indifference

Options :
1. ✖ a
2. ✖ b
3. ✔ c
4. ✖ d

Question Number : 144 Question Id : 6444 Question Type : MCQ Option Shuffling : No

Correct : 1.0 Wrong : 0.33

In a group of six people, there are 3 males, 2 housewives, 2 lecturers and 2 lawyers. B is the wife of E, who is a lecturer. C and F are unmarried. A is a male lecturer and C is a female lawyer.

Who is F?

a. Male lawyer b. Female lawyer c. Male lecturer d. Female lecture

Options :

1. ✔ a
2. ✖ b
3. ✖ c
4. ✖ d

Question Number : 145 Question Id : 6445 Question Type : MCQ Option Shuffling : No
Correct : 1.0 Wrong : 0.33

Arrange the following words in a meaningful logical sequence and choose the appropriate number sequence from the alternatives.

1. Block 2. State 3. Village 4. Country 5. Panchayat 6. District

a. 4, 2, 6, 1, 3, 5

b. 3, 5, 1, 6, 2, 4

c. 3, 5, 1, 2, 6, 4

d. 5, 1, 6, 2, 4, 3

Options :

1. ✖ a
2. ✔ b
3. ✖ c
4. ✖ d

Question Number : 146 Question Id : 6446 Question Type : MCQ Option Shuffling : No
Correct : 1.0 Wrong : 0.33

One term in the following number series is wrong. Find out the wrong term.

444, 220, 108, 52, 22, 10, 3

a. 220 b. 108 c. 52 d. 22

Options :

1. ✖ a
2. ✖ b
3. ✖ c
4. ✔ d

Question Number : 147 Question Id : 6447 Question Type : MCQ Option Shuffling : No
Correct : 1.0 Wrong : 0.33

In a certain code, '457' means '*sweet hot coffee*'; '265' means '*very hot day*' and '823' means '*day follows night*'. Which digit means '*very*' in that code?

a. 2 b. 5 c. 6 d. 7

Options :

1. ✖ a
2. ✖ b
3. ✔ c
4. ✖ d

Question Number : 148 Question Id : 6448 Question Type : MCQ Option Shuffling : No
Correct : 1.0 Wrong : 0.33

In a certain language, 'BACKWARD' is coded as 'KCABDRAW', then in that language, 'MOUNTAIN' would be coded as:

a. NUOMNIAT b. NUOMAINT c. NIATNUOM d. OMNUATNI

Options :

1. ✔ a
2. ✖ b
3. ✖ c
4. ✖ d

Question Number : 149 Question Id : 6449 Question Type : MCQ Option Shuffling : No
Correct : 1.0 Wrong : 0.33

A rat runs 12 ft towards West and turns right and runs 9 ft. It turns right again and runs 7 ft, turns left and covers 5 ft, turns left again and covers 3 ft. Finally, it turns right and covers 2 ft. Which direction is the rat facing now?

a. South b. North c. East d. West

Options :

1. ✖ a
2. ✔ b
3. ✖ c
4. ✖ d

Question Number : 150 Question Id : 6451 Question Type : MCQ Option Shuffling : No
Correct : 1.0 Wrong : 0.33

The numbers in the following figures follow a pattern. Find the number which will replace the question mark

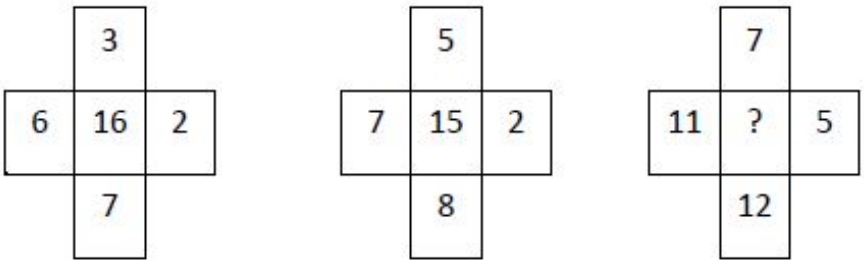

a. 28 b. 35 c. 32 d. 30

Options :

1. ✖ a
2. ✖ b
3. ✖ c
4. ✔ d