AglaSem Careers

Railway Recruitment Board

Notations :

1.Options shown in green color and with ✔ icon are correct.

2.Options shown in red color and with ✖ icon are incorrect.

Question Paper Name:	Senior Section Engineer 1st Sep Shift 2 Actual
Subject Name:	Senior Section Engineer
Creation Date:	2015-08-31 13:02:09.0
Cut Off:	0
Duration:	120
Number of Questions:	150
Total Marks:	150.0

Senior Section Engineer

Group Number :	1
Group Id :	35
Group Maximum Duration :	0
Group Minimum Duration :	120
Revisit allowed for view? :	No
Revisit allowed for edit? :	No
Break time:	0
Group Marks:	150.0

Senior Section Engineer

Section Id :	35
Section Number :	1
Section type :	Online
Mandatory or Optional:	Mandatory
Number of Questions:	150
Number of Questions to be attempted:	150
Section Marks:	150.0

Sub-Section Number:	1
Sub-Section Id:	35
Question Shuffling Allowed :	Yes

Question Number : 1 Question Id : 6151 Question Type : MCQ Option Shuffling : No Correct : 1.0 Wrong : 0.33

The enthalpy of a substance is defined as

a. $h = pv+RT$ b. $h = u+pT$ c. $h = u+pv$ d. $h = u-pv$

Options :

1. ✖ a

2. ✖ b
3. ✔ c
4. ✖ d

Question Number : 2 Question Id : 6152 Question Type : MCQ Option Shuffling : No
Correct : 1.0 Wrong : 0.33

Cyclic integral of any property is

a. Zero b. One c. Infinite d. Two

Options :
1. ✔ a
2. ✖ b
3. ✖ c
4. ✖ d

Question Number : 3 Question Id : 6153 Question Type : MCQ Option Shuffling : No
Correct : 1.0 Wrong : 0.33

The machine which violates the first law of thermodynamics is known as

a. PMM-I b. PMM-II c. PMM-III d. Heat engine

Options :
1. ✔ a
2. ✖ b
3. ✖ c
4. ✖ d

Question Number : 4 Question Id : 6154 Question Type : MCQ Option Shuffling : No
Correct : 1.0 Wrong : 0.33

The device in which the work is done by the fluid at the expense of its enthalpy is known as

a. Compressor b. Throttling device c. Turbine d. Heat exchanger

Options :
1. ✖ a
2. ✖ b
3. ✔ c
4. ✖ d

Question Number : 5 Question Id : 6155 Question Type : MCQ Option Shuffling : No
Correct : 1.0 Wrong : 0.33

A device which increases the velocity of a fluid at the expense of its pressure drop is known as

a. Diffuser b. Nozzle c. Throttling device d. Heat transfer

Options :
1. ✖ a
2. ✔ b
3. ✖ c

4. ✖ d

Question Number : 6 Question Id : 6156 Question Type : MCQ Option Shuffling : No
Correct : 1.0 Wrong : 0.33

The Prandtl number for liquid, which has velocity boundary layer much thicker than thermal boundary layer, is

a. Pr >> 1 b. Pr << 1 c. Pr ≈ 1 d. Pr = 0

Options :

1. ✔ a
2. ✖ b
3. ✖ c
4. ✖ d

Question Number : 7 Question Id : 6157 Question Type : MCQ Option Shuffling : No
Correct : 1.0 Wrong : 0.33

"At thermal equilibrium, the ratio of the total emissive power to the total absorptivity is constant for all bodies" is known as

a. Kirchhoff's law

b. Wien's displacement law

c. Maxwell's theory

d. Stefan Boltzmann law

Options :

1. ✔ a
2. ✖ b
3. ✖ c
4. ✖ d

Question Number : 8 Question Id : 6158 Question Type : MCQ Option Shuffling : No
Correct : 1.0 Wrong : 0.33

Which of the following characteristic does not belong to SI engine

a. It works on Otto cycle

b. It has a carburettor

c. The maximum obtainable value of thermal efficiency is high

d. Its compression ratio is lower

Options :

1. ✖ a
2. ✖ b
3. ✔ c
4. ✖ d

Question Number : 9 Question Id : 6159 Question Type : MCQ Option Shuffling : No
Correct : 1.0 Wrong : 0.33

The component of the engine that connects the link between the small end of the connecting rod and the piston is known as

a. Cams b. Fly wheel c. Gudgean pin d. Piston ring

Options :

1. ✖ a
2. ✖ b
3. ✔ c
4. ✖ d

Question Number : 10 Question Id : 6160 Question Type : MCQ Option Shuffling : No
Correct : 1.0 Wrong : 0.33

Diesel cycle is

a. Constant pressure heat addition cycle b. Constant volume heat addition cycle

c. Constant temperature heat addition cycle d. Constant entropy heat addition cycle

Options :

1. ✔ a
2. ✖ b
3. ✖ c
4. ✖ d

Question Number : 11 Question Id : 6161 Question Type : MCQ Option Shuffling : No
Correct : 1.0 Wrong : 0.33

An allowance that is given along the vertical walls of the pattern for ease of withdrawal of pattern from sand is known as

a. Shrinkages allowance b. Machining allowance

c. Draft allowance d. Camber allowance

Options :

1. ✖ a
2. ✖ b
3. ✔ c
4. ✖ d

Question Number : 12 Question Id : 6162 Question Type : MCQ Option Shuffling : No
Correct : 1.0 Wrong : 0.33

The ability of the mold sand to withstand extreme temperature level is known as

a. Plasticity b. Porosity c. Collapsibility d. Refractoriness

Options :

1. ✖ a
2. ✖ b
3. ✖ c
4. ✔ d

Question Number : 13 Question Id : 6163 Question Type : MCQ Option Shuffling : No Correct : 1.0 Wrong : 0.33

In an oxidizing flame

a. The proportion of oxygen and acetylene gases is same
b. The proportion of oxygen gas is greater than that of acetylene gas
c. The proportion of oxygen gas is lesser than that of the acetylene gas
d. The production of oxygen and acetylene gas is not important

Options :

1. ✖ a
2. ✔ b
3. ✖ c
4. ✖ d

Question Number : 14 Question Id : 6164 Question Type : MCQ Option Shuffling : No Correct : 1.0 Wrong : 0.33

An operation to enlarge the already existing hole is known as

a. Threading b. Drilling c. Reaming d. Boring

Options :

1. ✖ a
2. ✖ b
3. ✖ c
4. ✔ d

Question Number : 15 Question Id : 6165 Question Type : MCQ Option Shuffling : No Correct : 1.0 Wrong : 0.33

In an AC circuit, the ratio of kW / kVA represents

a. Power factor.
b. Load factor.
c. Form factor.
d. Diversity factor.

Options :

1. ✔ a
2. ✖ b
3. ✖ c
4. ✖ d

Question Number : 16 Question Id : 6166 Question Type : MCQ Option Shuffling : No Correct : 1.0 Wrong : 0.33

The frequency of DC supply is_____.

a. Zero.

b. 16 ⅔ Hz.

c. 50 Hz.

d. 100 Hz.

Options :

1. ✔ a

2. ✖ b

3. ✖ c

4. ✖ d

Question Number : 17 Question Id : 6167 Question Type : MCQ Option Shuffling : No Correct : 1.0 Wrong : 0.33

Iron losses in a D.C. machine are independent of variations in

a. speed

b. load

c. voltage

d. speed and voltage

Options :

1. ✖ a

2. ✔ b

3. ✖ c

4. ✖ d

Question Number : 18 Question Id : 6168 Question Type : MCQ Option Shuffling : No Correct : 1.0 Wrong : 0.33

Rotating magnetic field is produced in a _____

a. Single- phase induction motor.

b. Three- phase induction motor.

c. DC series motor.

d. AC series motor.

Options :

1. ✖ a

2. ✔ b

3. ✖ c

4. ✖ d

Question Number : 19 Question Id : 6169 Question Type : MCQ Option Shuffling : No Correct : 1.0 Wrong : 0.33

Which of the following power plants has the maximum efficiency?

a. Thermal

b. Hydroelectric

c. Nuclear

d. Diesel

Options :

1. ✖ a

2. ✖ b

3. ✔ c

4. ✖ d

Question Number : 20 Question Id : 6170 Question Type : MCQ Option Shuffling : No
Correct : 1.0 Wrong : 0.33

The starting winding of a single-phase motor is placed in

a. Rotor

b. Stator

c. Armature

d. Field

Options :

1. ✖ a

2. ✔ b

3. ✖ c

4. ✖ d

Question Number : 21 Question Id : 6171 Question Type : MCQ Option Shuffling : No
Correct : 1.0 Wrong : 0.33

Load factor is defined as the ratio of _____

a. Average Demand / Max. Demand.

b. Max. Demand / Average Demand.

c. Average Demand / Connected load.

d. Connected load / Max. Demand.

Options :

1. ✔ a

2. ✖ b

3. ✖ c

4. ✖ d

Question Number : 22 Question Id : 6172 Question Type : MCQ Option Shuffling : No
Correct : 1.0 Wrong : 0.33

The frequency of the secondary voltage of a transformer will be_____

a. Less than the frequency of the primary voltage.

b. Equal to the primary voltage.

c. Greater than the frequency of the primary voltage.

d. Very much greater than the frequency of the primary voltage

Options :

1. ✖ a
2. ✔ b
3. ✖ c
4. ✖ d

Question Number : 23 Question Id : 6173 Question Type : MCQ Option Shuffling : No
Correct : 1.0 Wrong : 0.33

In India, electrical power is transmitted by

a. 1 – phase a.c. system.

b. 3-wire d.c. system.

c. 3-phase 3-wire a.c. system.

d. 2-wire d.c. system

Options :

1. ✖ a
2. ✖ b
3. ✔ c
4. ✖ d

Question Number : 24 Question Id : 6174 Question Type : MCQ Option Shuffling : No
Correct : 1.0 Wrong : 0.33

In AC circuit the product of voltage and current is known as

a. Power.

b. Real power.

c. Resistive power.

d. Apparent power

Options :

1. ✖ a
2. ✖ b
3. ✖ c
4. ✔ d

Question Number : 25 Question Id : 6175 Question Type : MCQ Option Shuffling : No
Correct : 1.0 Wrong : 0.33

$(211)_x=(152)_8$, the base x is

a. 5

b. 6

c. 7

d. 9

Options :

1. ✖ a

2. ✖ b

3. ✔ c

4. ✖ d

Question Number : 26 Question Id : 6176 Question Type : MCQ Option Shuffling : No
Correct : 1.0 Wrong : 0.33

Which rectifier needs four diodes?

a. Half wave rectifier

b. Center-tap full wave rectifier

c. Bridge rectifier

d. Both b and c

Options :

1. ✖ a

2. ✖ b

3. ✔ c

4. ✖ d

Question Number : 27 Question Id : 6177 Question Type : MCQ Option Shuffling : No
Correct : 1.0 Wrong : 0.33

The concentration of minority carriers in an extrinsic semiconductor under equilibrium is

a. Directly proportional to the intrinsic concentration

b. Inversely proportional to the intrinsic concentration

c. Directly proportional to the doping concentration

d. Inversely proportional to the doping concentration

Options :

1. ✖ a

2. ✖ b

3. ✖ c

4. ✔ d

Question Number : 28 Question Id : 6178 Question Type : MCQ Option Shuffling : No
Correct : 1.0 Wrong : 0.33

The current flow in a semiconductor is due to

1. Drift current 2. Displacement current 3. Diffusion current

a. 1, 2 and 3

b. 1 and 2 only

c. 1 and 3 only

d. 2 and 3 only

Options :

1. ✖ a

2. ✖ b

3. ✔ c

4. ✖ d

Question Number : 29 Question Id : 6179 Question Type : MCQ Option Shuffling : No
Correct : 1.0 Wrong : 0.33

The zener diode shown in the circuit has a reverse breakdown voltage of 10 volts. The power dissipation in R_s would be

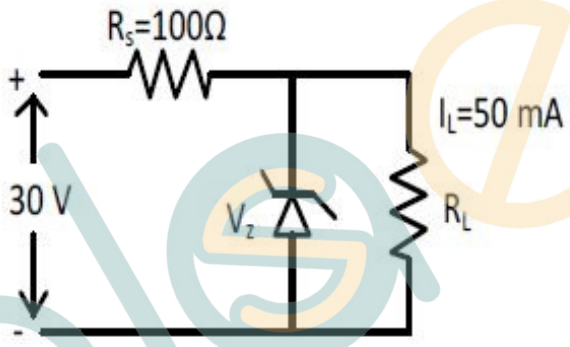

a. 4W

b. 2W

c. 3.5W

d. 1W

Options :

1. ✔ a

2. ✖ b

3. ✖ c

4. ✖ d

Question Number : 30 Question Id : 6180 Question Type : MCQ Option Shuffling : No
Correct : 1.0 Wrong : 0.33

Early effect in BJT is related to

a. Base narrowing

b. Avalanche breakdown

c. Zener breakdown

d. Thermal runaway

Options :

1. ✔ a

2. ✖ b
3. ✖ c
4. ✖ d

Question Number : 31 Question Id : 6181 Question Type : MCQ Option Shuffling : No
Correct : 1.0 Wrong : 0.33

The negative feedback in an amplifier leads to which one of the following?

a. Increase in current gain
b. Increase in voltage gain
c. Decrease in voltage gain
d. Decrease in bandwidth

Options :
1. ✖ a
2. ✖ b
3. ✔ c
4. ✖ d

Question Number : 32 Question Id : 6182 Question Type : MCQ Option Shuffling : No
Correct : 1.0 Wrong : 0.33

In a series resonant band-pass filter, a lower value of Q results in

a. A higher resonant frequency
b. A larger bandwidth
c. A higher impedance
d. A smaller bandwidth

Options :
1. ✖ a
2. ✔ b
3. ✖ c
4. ✖ d

Question Number : 33 Question Id : 6183 Question Type : MCQ Option Shuffling : No
Correct : 1.0 Wrong : 0.33

A low-pass π connected symmetrical filter section has an inductance of 200mH in its series arm and capacitances of 400 pF in each of its shunt arms. The cut-off frequency of the filter is:

a. 25.16 kHz
b. 6.29 kHz
c. 17.79 kHz
d. 35.59 kHz

Options :
1. ✔ a
2. ✖ b
3. ✖ c
4. ✖ d

Question Number : 34 Question Id : 6184 Question Type : MCQ Option Shuffling : No
Correct : 1.0 Wrong : 0.33

In phase modulation, phase deviation is proportional to:

a. Carrier phase

b. Message signal

c. Carrier amplitude

d. Message signal frequencies

Options :

1. ✖ a
2. ✔ b
3. ✖ c
4. ✖ d

Question Number : 35 Question Id : 6185 Question Type : MCQ Option Shuffling : No
Correct : 1.0 Wrong : 0.33

Which of the following roles fly ash does not play in concrete

a. Improving the workability

b. Accelerating the strength gain

c. Delaying the setting time of concrete

d. Helps in long-term strength gain

Options :

1. ✖ a
2. ✔ b
3. ✖ c
4. ✖ d

Question Number : 36 Question Id : 6186 Question Type : MCQ Option Shuffling : No
Correct : 1.0 Wrong : 0.33

According to IS 456, under normal circumstances, the maximum cement content in kg/cum (including fly ash and slag) allowed is

a. 500

b. 400

c. 450

d. 600

Options :

1. ✖ a
2. ✖ b
3. ✔ c
4. ✖ d

Question Number : 37 Question Id : 6187 Question Type : MCQ Option Shuffling : No
Correct : 1.0 Wrong : 0.33

The equation of flownets drawn for plotting the flow of a fluid is based on

a. Newton's third law

b. Abram's law

c. Einstein's energy equation

d. Darcy's law

Options :

1. ✖ a
2. ✖ b
3. ✖ c
4. ✔ d

Question Number : 38 Question Id : 6188 Question Type : MCQ Option Shuffling : No
Correct : 1.0 Wrong : 0.33

A beam is a structural member designed primarily to take which of the following type of load

a. Torsional

b. Bending

c. Compressive

d. Shear

Options :

1. ✖ a
2. ✔ b
3. ✖ c
4. ✖ d

Question Number : 39 Question Id : 6189 Question Type : MCQ Option Shuffling : No
Correct : 1.0 Wrong : 0.33

The ratio of compressive stress to volumetric strain is called as

a. Young's modulus

b. Shear modulus

c. Poisson's ratio

d. Bulk modulus of elasticity

Options :

1. ✖ a
2. ✖ b

3. ✖ c
4. ✔ d

Question Number : 40 Question Id : 6190 Question Type : MCQ Option Shuffling : No
Correct : 1.0 Wrong : 0.33

The minimum time before striking the props to arches (less than 6 m) as per IS 456 is

a. 14-day

b. 7-day

c. 3-day

d. 16-24 h

Options :
1. ✔ a
2. ✖ b
3. ✖ c
4. ✖ d

Question Number : 41 Question Id : 6191 Question Type : MCQ Option Shuffling : No
Correct : 1.0 Wrong : 0.33

An electrochemical process over the surface of steel, leading to oxidation of the metal is called as

a. Oxidation

b. Corrosion

c. Polishing

d. Laitance formation

Options :
1. ✖ a
2. ✔ b
3. ✖ c
4. ✖ d

Question Number : 42 Question Id : 6192 Question Type : MCQ Option Shuffling : No
Correct : 1.0 Wrong : 0.33

According to IS 1200, the formwork shall be measured in

a. Tonnage

b. cubic m

c. square meter

d. Linear length

Options :
1. ✖ a

2. ✖ b
3. ✔ c
4. ✖ d

Question Number : 43 Question Id : 6193 Question Type : MCQ Option Shuffling : No
Correct : 1.0 Wrong : 0.33

The time elapsed between the moment water is added to the ordinary Portland cement and the time when the cement completely loses its plasticity and can resist certain definite pressure is termed as

a. Initial setting time

b. Final setting time

c. Hydration time

d. Gestation period

Options :
1. ✖ a
2. ✔ b
3. ✖ c
4. ✖ d

Question Number : 44 Question Id : 6194 Question Type : MCQ Option Shuffling : No
Correct : 1.0 Wrong : 0.33

A fluid flow in which the density of the fluid does not change during flowing is called as

a. Incompressible

b. Uniform

c. Compressible

d.Non-linear

Options :
1. ✔ a
2. ✖ b
3. ✖ c
4. ✖ d

Question Number : 45 Question Id : 6195 Question Type : MCQ Option Shuffling : No
Correct : 1.0 Wrong : 0.33

An earth retention and excavation support technique that retains soil, using steel sheet sections with interlocking edges is

a. Retaining wall

b. Anchored wall

c. Sheet piling

d. Interlocked end-bearing piling

Options :

1. ✖ a
2. ✖ b
3. ✔ c
4. ✖ d

Question Number : 46 Question Id : 6196 Question Type : MCQ Option Shuffling : No
Correct : 1.0 Wrong : 0.33

The formation of bubbles of vapour in a flowing fluid is called as

a. Cavitation

b. Corrosion

c. Gasification

d. Boiling

Options :

1. ✔ a
2. ✖ b
3. ✖ c
4. ✖ d

Question Number : 47 Question Id : 6197 Question Type : MCQ Option Shuffling : No
Correct : 1.0 Wrong : 0.33

For the measurement of direct current we may use

a. A moving iron type ammeter
b. A galvanometer
c. A PMMC ammeter
d. A hot wire type ammeter

Options :

1. ✖ a
2. ✖ b
3. ✔ c
4. ✖ d

Question Number : 48 Question Id : 6198 Question Type : MCQ Option Shuffling : No
Correct : 1.0 Wrong : 0.33

The following could be the one of the errors in an energy meter

a. Clamping
b. Clipping
c. Creeping
d. Clogging

Options :

1. ✖ a
2. ✖ b
3. ✔ c
4. ✖ d

Question Number : 49 Question Id : 6199 Question Type : MCQ Option Shuffling : No
Correct : 1.0 Wrong : 0.33

The extension range of ammeter and voltmeter can be made respectively by

a. Using multiplier and shunt
b. Using shunt and multiplier
c. Using series capacitor and series inductor
d. Reducing the spring tension of deflecting system

Options :

1. ✖ a
2. ✔ b
3. ✖ c
4. ✖ d

Question Number : 50 Question Id : 6200 Question Type : MCQ Option Shuffling : No
Correct : 1.0 Wrong : 0.33

Wattmeter is of

a. PMMC type
b. Dynamometer type
c. Moving iron type
d. Hot wire type

Options :

1. ✖ a
2. ✔ b
3. ✖ c
4. ✖ d

Question Number : 51 Question Id : 6201 Question Type : MCQ Option Shuffling : No
Correct : 1.0 Wrong : 0.33

The KWh meter can be classified as an ____ instrument

a. Deflecting
b. Digital
c. Recording
d. Indicating

Options :

1. ✖ a
2. ✖ b
3. ✔ c
4. ✖ d

Question Number : 52 Question Id : 6202 Question Type : MCQ Option Shuffling : No
Correct : 1.0 Wrong : 0.33

The example of the detritus food chain is seen in

a. green plants
b. mangroves
c. saprotrophs
d. photoautotrophs

Options :

1. ✖ a
2. ✔ b
3. ✖ c
4. ✖ d

Question Number : 53 Question Id : 6203 Question Type : MCQ Option Shuffling : No
Correct : 1.0 Wrong : 0.33

The symptoms of water borne diseases transmitted by pathogenic bacteria are

a. gastrointestinal disorders
b. kidney failure
c. liver damage
d. cardiac disease

Options :

1. ✔ a
2. ✖ b
3. ✖ c
4. ✖ d

Question Number : 54 Question Id : 6204 Question Type : MCQ Option Shuffling : No
Correct : 1.0 Wrong : 0.33

One turbidity unit NTU is equal to

a. 1.0 mg/l farmazin

b. 1.0 meq/l SiO_2

c. 1.0 mg/l SiO_2

d. 1.0 meq/l kaolin

Options :

1. ✖ a
2. ✖ b
3. ✔ c
4. ✖ d

Question Number : 55 Question Id : 6205 Question Type : MCQ Option Shuffling : No
Correct : 1.0 Wrong : 0.33

The oxidant that produces photochemical smog in the atmosphere is

a. Hydrocarbon and nitrate

b. ozone

c. Carbon monoxide and nitrate

d. Carbon dioxide and nitrate

Options :

1. ✖ a
2. ✔ b
3. ✖ c
4. ✖ d

Question Number : 56 Question Id : 6206 Question Type : MCQ Option Shuffling : No
Correct : 1.0 Wrong : 0.33

The prescribed permissible noise level, Leq for residential area at day time is

a. 65 dBA

b. 45 dBA

c. 50 dBA

d. 55 dBA

Options :

1. ✖ a
2. ✖ b
3. ✖ c
4. ✔ d

Question Number : 57 Question Id : 6207 Question Type : MCQ Option Shuffling : No
Correct : 1.0 Wrong : 0.33

Due to global warming, the average temperature of the earth surface increases at the rate of

a. 0.5 ^{0}C per year

b. 1.5 ^{0}C per year

c. 0.25 ^{0}C per year

d. 0.5 ^{0}C per month

Options :

1. ✔ a
2. ✖ b
3. ✖ c
4. ✖ d

Question Number : 58 Question Id : 6208 Question Type : MCQ Option Shuffling : No
Correct : 1.0 Wrong : 0.33

Which of the following works on the principle of 'locality of reference'?

a. RAM b. ROM

c. Cache memory d. Associative memory

Options :

1. ✖ a
2. ✖ b
3. ✔ c
4. ✖ d

Question Number : 59 Question Id : 6209 Question Type : MCQ Option Shuffling : No
Correct : 1.0 Wrong : 0.33

Which of the following is a real-time operating system?

a. MS-Windows b. Linux

c. Unix d. QNX

Options :

1. ✖ a
2. ✖ b
3. ✖ c
4. ✔ d

Question Number : 60 Question Id : 6210 Question Type : MCQ Option Shuffling : No
Correct : 1.0 Wrong : 0.33

Considering 1's complement representation for negative numbers, -126 will be stored into an 8-bit memory space as

a. 10000001 b. 11111111

c. 10111110 d. 11100001

Options :

1. ✔ a
2. ✖ b
3. ✖ c
4. ✖ d

Question Number : 61 Question Id : 6211 Question Type : MCQ Option Shuffling : No
Correct : 1.0 Wrong : 0.33

Considering X and Y as binary variables, the equivalent Boolean expression for (X.Y)' is

a. X' + Y b. X + Y'

c. X' + Y' d. X'.Y'

Options :

1. ✖ a
2. ✖ b
3. ✔ c
4. ✖ d

Question Number : 62 Question Id : 6212 Question Type : MCQ Option Shuffling : No
Correct : 1.0 Wrong : 0.33

'C' is a _____

a. Low-level programming language b. High-level programming language

c. Assembly language d. Machine language

Options :

1. ✖ a
2. ✔ b
3. ✖ c
4. ✖ d

Question Number : 63 Question Id : 6213 Question Type : MCQ Option Shuffling : No
Correct : 1.0 Wrong : 0.33

Which of the following statements about Assembly language is correct?

a. Assembly language is machine dependent

b. Assembly language is machine independent

c. Assembly language is easier than high-level language to write programs

d. Assembly language programs require interpreter

Options :

1. ✔ a
2. ✖ b
3. ✖ c
4. ✖ d

Question Number : 64 Question Id : 6214 Question Type : MCQ Option Shuffling : No
Correct : 1.0 Wrong : 0.33

HTTPS stands for

a. Hyper Text Transmission Protocol Secure

b. Hyper Text Transfer Program Secure

c. Hyper Text Transfer Protocol Secure

d. Hyper Text Transmission Program Secure

Options :

1. ✖ a
2. ✖ b
3. ✔ c
4. ✖ d

Question Number : 65 Question Id : 6215 Question Type : MCQ Option Shuffling : No
Correct : 1.0 Wrong : 0.33

Which of the following is not a valid category of computer viruses?

a. Macro viruses

b. Trojans

c. Memory resident viruses

d. Interrupts

Options :

1. ✖ a
2. ✖ b
3. ✖ c
4. ✔ d

Question Number : 66 Question Id : 6216 Question Type : MCQ Option Shuffling : No
Correct : 1.0 Wrong : 0.33

Which of the following is a sequential access memory?

a. RAM

b. ROM

c. Hard Disk

d. Magnetic Tape

Options :

1. ✖ a
2. ✖ b
3. ✖ c
4. ✔ d

Question Number : 67 Question Id : 6217 Question Type : MCQ Option Shuffling : No
Correct : 1.0 Wrong : 0.33

The 2's complement of the binary number $(11001100)_2$ is

a. $(00110100)_2$ b. $(00110011)_2$

c. $(00110000)_2$ d. $(11110100)_2$

Options :

1. ✔ a
2. ✖ b
3. ✖ c
4. ✖ d

Question Number : 68 Question Id : 6218 Question Type : MCQ Option Shuffling : No
Correct : 1.0 Wrong : 0.33

If the distance between the two stations is 200 kilometres and on a map it is shown by 5 cm. The R.F. of the scale will be

a. 1/40 b. 1/4000000 c. 1/2000 d. 1/200

Options :

1. ✖ a
2. ✔ b
3. ✖ c
4. ✖ d

Question Number : 69 Question Id : 6219 Question Type : MCQ Option Shuffling : No
Correct : 1.0 Wrong : 0.33

The curve traced out by a point on the circumference of a circle, which rolls without slipping along another larger diameter circle outside it

a. epicycloid b. spiral

c. hypocycloid d. involute

Options :

1. ✔ a
2. ✖ b
3. ✖ c
4. ✖ d

Question Number : 70 Question Id : 6220 Question Type : MCQ Option Shuffling : No

Correct : 1.0 Wrong : 0.33

If the true and apparent inclinations of a line with V.P. are equal, the line is

a. Parallel to profile plane

b. Parallel to vertical plane

c.Parallel to horizontal plane

d. Inclined to both reference planes

Options :

1. ✖ a
2. ✖ b
3. ✔ c
4. ✖ d

Question Number : 71 Question Id : 6221 Question Type : MCQ Option Shuffling : No
Correct : 1.0 Wrong : 0.33

A circular plane with 80 mm diameter has one of its ends of the diameter in the H.P. while the other end is in the V.P..The plane is inclined at 30^0 to H.P. and 60^0 to V.P.. The shape of its projection on profile plane will be

a. a circle of same diameter

b. a circle of larger diameter

c. a circle of smaller diameter

d. straight line

Options :

1. ✖ a
2. ✖ b
3. ✖ c
4. ✔ d

Question Number : 72 Question Id : 6222 Question Type : MCQ Option Shuffling : No
Correct : 1.0 Wrong : 0.33

The type of projection in which the surfaces are equally foreshortened is

a. cabinet

b. isometric

c. oblique

d. orthographic

Options :

1. ✖ a
2. ✔ b
3. ✖ c
4. ✖ d

Question Number : 73 Question Id : 6223 Question Type : MCQ Option Shuffling : No
Correct : 1.0 Wrong : 0.33

Radhey slides a box at a constant speed up a frictionless slope. During the motion, he pulls the rope attached to the box keeping it parallel to the slope. The tension in the rope is

a. less than the weight of the box
b. equal to the weight of the box
c. more than the weight of the box
d. more than the tension would be if the box were stationary.

Options :

1. ✔ a
2. ✖ b
3. ✖ c
4. ✖ d

Question Number : 74 Question Id : 6224 Question Type : MCQ Option Shuffling : No
Correct : 1.0 Wrong : 0.33

Let g be the acceleration due to gravity at the surface of earth (radius R) .Then the acceleration due to gravity $g(d)$ at a depth d below the surface of the earth is given by

a. $g(d) = g(1 - d/R)$
b. $g(d) = g(1 - 2d/R)$
c. $g(d) = g(1 + d/R)$
d. $g(d) = g(1 + 2d/R)$.

Options :

1. ✔ a
2. ✖ b
3. ✖ c
4. ✖ d

Question Number : 75 Question Id : 6225 Question Type : MCQ Option Shuffling : No
Correct : 1.0 Wrong : 0.33

For a collision of two bodies, which of the following statements about the system of two bodies is correct?

a. The momentum and kinetic energy are conserved if the collision is elastic
b. The momentum and kinetic energy are conserved if the collision is inelastic
c. The momentum is conserved but kinetic energy is not conserved if the collision is elastic
d. The kinetic energy is conserved but momentum is not conserved if the collision is inelastic.

Options :

1. ✔ a
2. ✖ b
3. ✖ c
4. ✖ d

Question Number : 76 Question Id : 6226 Question Type : MCQ Option Shuffling : No
Correct : 1.0 Wrong : 0.33

. An organ pipe open at both ends is made to go into resonance at a frequency f_o . When one end of the pipe is closed, it is found that it goes into resonance at a frequency f_c . If both the resonances are first harmonics, which of the following relations between f_o and f_c is correct ?

a. $f_o = f_c$
b. $f_o = \frac{1}{2} f_c$
c. $f_o = 2 f_c$
d. $f_o = \frac{2}{3} f_c$.

Options :
1. ✖ a
2. ✖ b
3. ✔ c
4. ✖ d

Question Number : 77 Question Id : 6227 Question Type : MCQ Option Shuffling : No
Correct : 1.0 Wrong : 0.33

Two identical thin lenses of same focal lengths f are placed in contact so that their optic axes coincide. The focal length of the combination is

a. f
b. $f/2$
c. $2f$
d. $4f$.

Options :
1. ✖ a
2. ✔ b
3. ✖ c
4. ✖ d

Question Number : 78 Question Id : 6228 Question Type : MCQ Option Shuffling : No
Correct : 1.0 Wrong : 0.33

An electric current is maintained through a conductor. The accompanying electric field must be

a. zero
b. perpendicular to current flow
c. parallel to current flow
d. anti-parallel to current flow.

Options :
1. ✖ a
2. ✖ b
3. ✔ c
4. ✖ d

Question Number : 79 Question Id : 6229 Question Type : MCQ Option Shuffling : No
Correct : 1.0 Wrong : 0.33

The solubility product (Ksp) of $PbCO_3$ at 20^0C is 7.84×10^{-14} $mol^2 L^{-2}$. What is its solubility in water at $20\ ^0C$?

a. 2.80×10^{-7} mol L^{-1}

b. 3.92×10^{-14} mol L^{-1}

c. 3.92×10^{-7} mol L^{-1}

d. 2.80×10^{-14} mol L^{-1}

Options :

1. ✔ a
2. ✖ b
3. ✖ c
4. ✖ d

Question Number : 80 Question Id : 6230 Question Type : MCQ Option Shuffling : No
Correct : 1.0 Wrong : 0.33

Which of the following is the most acidic in nature?

a. Phenol

b. 2- Nitrophenol

c. 3- Nitrophenol

d. 2,4- Dinitrophenol

Options :

1. ✖ a
2. ✖ b
3. ✖ c
4. ✔ d

Question Number : 81 Question Id : 6231 Question Type : MCQ Option Shuffling : No
Correct : 1.0 Wrong : 0.33

What is the coordination number of zinc in the complex ion $[Zn(OH)_4(H_2O)_2]^{2-}$?

a. 6

b. 4

c. 2

d. 0

Options :

1. ✔ a
2. ✖ b
3. ✖ c
4. ✖ d

Question Number : 82 Question Id : 6232 Question Type : MCQ Option Shuffling : No
Correct : 1.0 Wrong : 0.33

Addition of 5 grams of solute **A** (molecular mass=100) to 100 grams of solvent **B** causes the same elevation of boiling point as the addition of 10 grams of solute **C** to 200 grams of the same solvent **B**. What is the molecular mass of the solute C?

a. 200

b. 50

c. 150

d. 100

Options :

1. ✖ a
2. ✖ b
3. ✖ c
4. ✔ d

Question Number : 83 Question Id : 6233 Question Type : MCQ Option Shuffling : No
Correct : 1.0 Wrong : 0.33

Which of the following pair of molecules of the compounds will react together in presence of sodium hydroxide solution under suitable conditions to produce a mixture of four compounds?

a. $CH_3CH_2CHO + CH_3CH_2CHO$

b. $CH_3CHO + CH_3CHO$

c. $CH_3CHO + CH_3CH_2CHO$

d. $CH_3CHO + C_6H_5CHO$

Options :

1. ✖ a
2. ✖ b
3. ✔ c
4. ✖ d

Question Number : 84 Question Id : 6234 Question Type : MCQ Option Shuffling : No
Correct : 1.0 Wrong : 0.33

The correct statement concerning the molecule of ammonia is

a. It is a V- shaped molecule.

b. The H-N-H bond angles are less than 109^0- $28^/$.

c. The repulsion between lone pair and bond pairs of electrons is less than that bond pair- bond pair.

d. Its shape is tetrahedral with lone pairs in two positions.

Options :

1. ✖ a
2. ✔ b
3. ✖ c
4. ✖ d

Question Number : 85 Question Id : 6235 Question Type : MCQ Option Shuffling : No
Correct : 1.0 Wrong : 0.33

In a pyramid of number shown below which gets the least amount of energy from its food

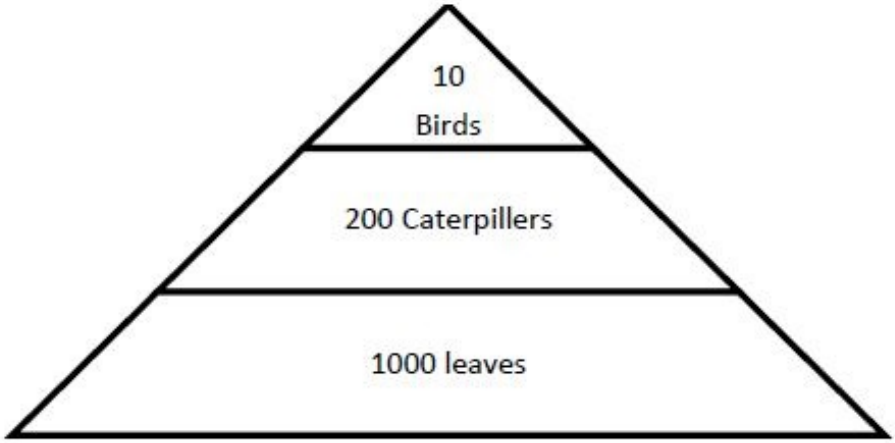

a. Birds
b. Caterpillars
c. Leaves
d. All three get equal amount of energy from food

Options :

1. ✔ a
2. ✖ b
3. ✖ c
4. ✖ d

Question Number : 86 Question Id : 6236 Question Type : MCQ Option Shuffling : No
Correct : 1.0 Wrong : 0.33

. Few of the delicious edible fish are not becoming endangered because of

a. Natural disasters
b. Destruction of their habitat
c. Over fishing by humans
d. Rising of ocean levels

Options :

1. ✖ a
2. ✖ b
3. ✖ c
4. ✔ d

Question Number : 87 Question Id : 6237 Question Type : MCQ Option Shuffling : No
Correct : 1.0 Wrong : 0.33

Humans belong to the kingdom

a. Animalia
b. Plantae
c. Fungi
d. Monera

Options :

1. ✔ a
2. ✖ b

3. ✖ c
4. ✖ d

Question Number : 88 Question Id : 6238 Question Type : MCQ Option Shuffling : No
Correct : 1.0 Wrong : 0.33

In the mouth, bread tastes sweet after sometime because bread is made of

a. sugar
b. starch and gets converted into sugar by saliva
c. protein and gets converted into peptides by saliva
d. not bread but saliva contains sugar

Options :
1. ✖ a
2. ✔ b
3. ✖ c
4. ✖ d

Question Number : 89 Question Id : 6239 Question Type : MCQ Option Shuffling : No
Correct : 1.0 Wrong : 0.33

A farmer wanted to raise ginger and turmeric in his farm. What will you tell him to use for growing these?

a. Use their rhizomes with axillary buds
b. Use seed for ginger and rhizome for turmeric
c. Use the roots of both ginger and turmeric
d. Use seeds for raising ginger and rhizome for turmeric

Options :
1. ✔ a
2. ✖ b
3. ✖ c
4. ✖ d

Question Number : 90 Question Id : 6240 Question Type : MCQ Option Shuffling : No
Correct : 1.0 Wrong : 0.33

Cat belongs to Class Mammalia because

a. it gives birth to its young ones and feeds them on its milk
b. it has teeth which can cut flesh
c. it has pads below its toes
d. it has no hair on its body

Options :
1. ✔ a
2. ✖ b
3. ✖ c
4. ✖ d

Question Number : 91 Question Id : 6241 Question Type : MCQ Option Shuffling : No

Correct : 1.0 Wrong : 0.33

. HCF of two numbers, each consisting of four digits, is 103 and their LCM is 19261. The difference of the numbers is

a. 618
b. 581
c. 518
d. 481

Options :

1. ✔ a
2. ✖ b
3. ✖ c
4. ✖ d

Question Number : 92 Question Id : 6242 Question Type : MCQ Option Shuffling : No
Correct : 1.0 Wrong : 0.33

Let $a=3^{129} x5^{128} x7^{22}$,$b=3^{128} x5^{129} x7^{22}$
$c=3^{128} x5^{128} x7^{22}$ and $d=3^{129} x5^{128} x7^{23}$
HCF of a,b,c and d is

a. $3^{129} x5^{128} x7^{22}$
b. $(15)^{128} x7^{22}$
c. $3^{128} x5^{128} x7^{23}$
d. $(15)^{129} x7^{23}$

Options :

1. ✖ a
2. ✔ b
3. ✖ c
4. ✖ d

Question Number : 93 Question Id : 6243 Question Type : MCQ Option Shuffling : No
Correct : 1.0 Wrong : 0.33

The selling price of a certain commodity was reduced by 20%. As a result of it, the sale was increased by 30%. What was the total effect of it on cash collected by daily sale?

a. 4% increase
b. 4% decrease
c. 2.5 % decrease
d. 2% increase

Options :

1. ✔ a
2. ✖ b
3. ✖ c
4. ✖ d

Question Number : 94 Question Id : 6244 Question Type : MCQ Option Shuffling : No
Correct : 1.0 Wrong : 0.33

If a:b=8:15, b:c= 5:12 and c:d= 4:15, then b:d is

a. 9:1
b. 2:9
c. 9:2
d. 1:9

Options :

1. ✖ a
2. ✖ b
3. ✖ c
4. ✔ d

Question Number : 95 Question Id : 6245 Question Type : MCQ Option Shuffling : No
Correct : 1.0 Wrong : 0.33

A sum of Rs.7890 is distributed among A, B and C is such a way that if their shares are decreased by Rs 25, Rs 28 and Rs 37 respectively, then they have money in the ratio 5:10:11. The sum of amounts gives to A and C is (in Rs.)

a. 1553
b. 3065
c. 3362
d. 4862

Options :

1. ✖ a
2. ✖ b
3. ✖ c
4. ✔ d

Question Number : 96 Question Id : 6246 Question Type : MCQ Option Shuffling : No
Correct : 1.0 Wrong : 0.33

. In a solution the ratio of acid and water is 3:2 in another solution, the ratio of water and acid is 5:4. What quantity (in liters) of second should be mixed with three liters of first solution such that the ratio of acid and water in the is 1:1?

a. $4\frac{2}{5}$
b. $5\frac{1}{3}$
c. $5\frac{2}{5}$
d. $6\frac{2}{3}$

Options :

1. ✖ a
2. ✖ b
3. ✔ c

4. ✖ d

Question Number : 97 Question Id : 6247 Question Type : MCQ Option Shuffling : No
Correct : 1.0 Wrong : 0.33

. Alloys A and B are made of silver and copper only. Ratios of silver and copper in A and B are should be melted so as to form another 15 kg alloy containing 80% silver?

a. 10 kg, 5 kg
b. 6kg, 9 kg
c. 7 kg, 8 kg
d. 12 kg, 3 kg

Options :

1. ✖ a
2. ✔ b
3. ✖ c
4. ✖ d

Question Number : 98 Question Id : 6248 Question Type : MCQ Option Shuffling : No
Correct : 1.0 Wrong : 0.33

A loan of Rs.62496 is to be paid back in three equal annual installments. If the interest is compounded annually at $12\frac{1}{2}$%, then each installment will be of (in Rs.)

a. 26736
b. 26244
c. 25736
d. 24244

Options :

1. ✖ a
2. ✔ b
3. ✖ c
4. ✖ d

Question Number : 99 Question Id : 6249 Question Type : MCQ Option Shuffling : No
Correct : 1.0 Wrong : 0.33

Two equal sums are lent out at 6 % and 5% simple interest per annum respectively at the same time. The first is recovered 24 years earlier than the second one and the amount received in each case was Rs. 28800. Each sum (in Rs.) was

a. 18000
b. 20000
c. 20500
d. 2200

Options :

1. ✔ a
2. ✖ b
3. ✖ c
4. ✖ d

Question Number : 100 Question Id : 6250 Question Type : MCQ Option Shuffling : No
Correct : 1.0 Wrong : 0.33

Marked price of a washing machine is Rs.7200. If it is sold at a discount of $16\frac{2}{3}\%$ of the marked price, the gain is 25 %. if it is sold for Rs.1600 below marked price, then there is a

a. Loss of $16\frac{2}{3}\%$
b. gain of $14\frac{2}{7}\%$
c. loss of $14\frac{2}{7}\%$
d. gain of $16\frac{2}{3}\%$

Options :
1. ✖ a
2. ✖ b
3. ✖ c
4. ✔ d

Question Number : 101 Question Id : 6251 Question Type : MCQ Option Shuffling : No
Correct : 1.0 Wrong : 0.33

Hamid sold a chair at a profit of 6.5%. If he had sold it for Rs.687.5 more, he would have gained x%. If the cost price of the chair is Rs.12500 then the value of x is

a. 10
b. 12
c. 14
d. 16

Options :
1. ✖ a
2. ✔ b
3. ✖ c
4. ✖ d

Question Number : 102 Question Id : 6252 Question Type : MCQ Option Shuffling : No
Correct : 1.0 Wrong : 0.33

A train leaves a station A at 5 am. And reaches B at 9 a.m. Another train leaves B at 6: 30 am and reaches A at 10 am on the same day. On parallel tracks. They will meet each other at

a. 7:40 a.m.
b. 7:50 a.m.
c. 8:40 a.m.
d. 8:50 a.m.

Options :
1. ✔ a
2. ✖ b
3. ✖ c
4. ✖ d

Question Number : 103 Question Id : 6253 Question Type : MCQ Option Shuffling : No
Correct : 1.0 Wrong : 0.33

A person can row 9 km/hour in still water and he finds that it takes him twice as much time to row upstream as to row downstream the same distance. The speed of the current, in km/hour, is

a. 2
b. 3
c. 2.5
d. 3.5

Options :

1. ✖ a
2. ✔ b
3. ✖ c
4. ✖ d

Question Number : 104 Question Id : 6254 Question Type : MCQ Option Shuffling : No
Correct : 1.0 Wrong : 0.33

. Two persons working 2 hours a day assemble 3 machines in 3 days. The number of machines assembled by 5 persons working 4 hours a day in 4 days is

a. 10
b. 12
c. 15
d. 20

Options :

1. ✖ a
2. ✖ b
3. ✖ c
4. ✔ d

Question Number : 105 Question Id : 6255 Question Type : MCQ Option Shuffling : No
Correct : 1.0 Wrong : 0.33

Two pipes A and B can fill a tank with water in 24 hours and 32 hours respectively. Both the pipes are open together. If the tank is filled up in 14 hours, then the first pipe must be turned off after

a. 10 hours
b. $12\frac{1}{2}$ hours
c. $13\frac{1}{2}$ hours
d. 12 hours

Options :

1. ✖ a
2. ✖ b
3. ✔ c

4. ✖ d

Question Number : 106 Question Id : 6256 Question Type : MCQ Option Shuffling : No
Correct : 1.0 Wrong : 0.33

Anu travel by car and covers $\frac{1}{4}^{th}$ of her journey with a speed of 60 km/hour, 40 % her journey with a speed of 50 km/hour, and the rest with a speed of 42 km/hours. The average speed (km/hour) for the whole journey is about

a. 46.8
b. 48.8
c. 49.7
d. 50.1

Options :
1. ✖ a
2. ✔ b
3. ✖ c
4. ✖ d

Question Number : 107 Question Id : 6257 Question Type : MCQ Option Shuffling : No
Correct : 1.0 Wrong : 0.33

The average of n numbers is $\overline{x}$. If the first number is increased by 1, second by 2, third by 3 and so on, then their average is $\overline{y}$. The value of $\overline{y}-\overline{x}$ is

a. X
b. $\frac{n}{2}+1$
c. $\frac{n(n+1)}{2}$
d. $\frac{n+1}{2}$

Options :
1. ✖ a
2. ✖ b
3. ✖ c
4. ✔ d

Question Number : 108 Question Id : 6258 Question Type : MCQ Option Shuffling : No
Correct : 1.0 Wrong : 0.33

The number of real roots of the equation
$(x-\sqrt{2})^2+(x-1)^2+(2x-3)^2=0$ is

a. 0
b. 1
c. 2
d. 3

Options :

1. ✔ a
2. ✖ b
3. ✖ c
4. ✖ d

Question Number : 109 Question Id : 6259 Question Type : MCQ Option Shuffling : No Correct : 1.0 Wrong : 0.33

If the equations $x^2+ax+b=0$ and $x^2+bx+a=0$, where $a \neq b$, have a common root, then the value of $|a+b|$ is

a. 0
b. 1
c. 2
d. 3

Options :

1. ✖ a
2. ✔ b
3. ✖ c
4. ✖ d

Question Number : 110 Question Id : 6260 Question Type : MCQ Option Shuffling : No Correct : 1.0 Wrong : 0.33

Which of the following is not a factor of $7x-x^3-6$?

a. 1-x
b. x+3
c. x+2
d. x-2

Options :

1. ✖ a
2. ✖ b
3. ✔ c
4. ✖ d

Question Number : 111 Question Id : 6261 Question Type : MCQ Option Shuffling : No Correct : 1.0 Wrong : 0.33

Factorization of $x^3-23x^2+142x-120$ is

a. (x-1)(x-10)(x-12)
b. (x+1)(x+10)(x-12)
c. (x-1)(x+10)(x-12)
d. (x-1)(x-10)(x+12)

Options :

1. ✔ a
2. ✖ b

3. ✖ c

4. ✖ d

Question Number : 112 Question Id : 6262 Question Type : MCQ Option Shuffling : No
Correct : 1.0 Wrong : 0.33

The product $(32)x(32)^{\frac{1}{6}}x(32)^{\frac{1}{36}}x$ .....∝ is equal to

a. 2^4

b. 2^5

c. 2^6

d. 2^8

Options :

1. ✖ a

2. ✖ b

3. ✔ c

4. ✖ d

Question Number : 113 Question Id : 6263 Question Type : MCQ Option Shuffling : No
Correct : 1.0 Wrong : 0.33

The sum of first n terms of two arithmetic progression are in the ratio (2n+4) :(3n+5). The ratio of their 15th terms is

a. 31:64

b. 31:46

c. 63:91

d. 60:89

Options :

1. ✖ a

2. ✔ b

3. ✖ c

4. ✖ d

Question Number : 114 Question Id : 6264 Question Type : MCQ Option Shuffling : No
Correct : 1.0 Wrong : 0.33

If $\frac{sec\theta+tan\theta}{sec\theta-tan\theta}=\frac{5}{3}$ 0^0 <θ 90^0 then the value of cosecθ is

a. 2

b. $\frac{\sqrt{15}}{4}$

c. $\frac{4}{\sqrt{15}}$

d. 4

Options :

1. ✖ a

2. ✖ b

3. ✖ c

4. ✔ d

Question Number : 115 Question Id : 6265 Question Type : MCQ Option Shuffling : No
Correct : 1.0 Wrong : 0.33

The length of the shadow of a pole is 90m, when the sun's elevation is 30^0.The length of the shadow of the pole is x meter Sun's elevation is 60^0.The value of x is

a. $15\sqrt{3}$
b. 30
c. 45
d. $20\sqrt{3}$

Options :
1. ✖ a
2. ✔ b
3. ✖ c
4. ✖ d

Question Number : 116 Question Id : 6266 Question Type : MCQ Option Shuffling : No
Correct : 1.0 Wrong : 0.33

What are the main historical sources found in the Bhimbetka area ?

a. Rock shelter and paintings
b. Remains of the palace of the Pandavas
c. Rock features shaped like Bhim
d. Carvings of hunting scenes on the wall

Options :
1. ✔ a
2. ✖ b
3. ✖ c
4. ✖ d

Question Number : 117 Question Id : 6267 Question Type : MCQ Option Shuffling : No
Correct : 1.0 Wrong : 0.33

In which period of Ancient India were Guilds, new methods in agriculture, towns and trade routes found ?

a. Mauryan
b. Kushan Period
c. Rastrakutas.
d. Gupta Period

Options :
1. ✖ a
2. ✖ b
3. ✖ c
4. ✔ d

Question Number : 118 Question Id : 6268 Question Type : MCQ Option Shuffling : No
Correct : 1.0 Wrong : 0.33

Why was the Civil Disobedience movement successful in India?

a. More women in the movement against British for Swaraj.

b. British keenness to hand over power after World War 2.

c. Support to people of the Indian National Army and the Royal Indian Navy

d. Conviction of Congress not to seek support of the opposition parties.

Options :

1. ✖ a
2. ✖ b
3. ✔ c
4. ✖ d

Question Number : 119 Question Id : 6269 Question Type : MCQ Option Shuffling : No
Correct : 1.0 Wrong : 0.33

When a gorge is formed in which direction will the hard rock be eroded by the river?

a. Down

b. Backward

c. Along faults

d. Away from soft rock

Options :

1. ✖ a
2. ✔ b
3. ✖ c
4. ✖ d

Question Number : 120 Question Id : 6270 Question Type : MCQ Option Shuffling : No
Correct : 1.0 Wrong : 0.33

Which is the special feature which distinguishes the cyclones of the Arabian sea from those of the Bay of Bengal?

a. Low intensity cyclones

b. Occurrence of cyclones before monsoons

c. Absence of frequent cyclones.

d. Cyclones moving away from the west coast

Options :

1. ✖ a
2. ✖ b
3. ✔ c
4. ✖ d

Question Number : 121 Question Id : 6271 Question Type : MCQ Option Shuffling : No

Correct : 1.0 Wrong : 0.33

What is the likely change that Foreign Direct Investment will bring about in Indian Horticulture?

a. Increased use of fertilizer and hybrid seeds.
b. Slowing down of organic farming .
c. More investment in floriculture in hill areas.
d. Expansion of area under plantations.

Options :

1. ✔ a
2. ✖ b
3. ✖ c
4. ✖ d

Question Number : 122 Question Id : 6272 Question Type : MCQ Option Shuffling : No
Correct : 1.0 Wrong : 0.33

.. Which special area related to children is included in the Directive Principles of State Policy in India

a. Early childhood care and education
b. Compulsory education for all
c. Education upto age of 14
d. Free education for Economically weaker sections

Options :

1. ✔ a
2. ✖ b
3. ✖ c
4. ✖ d

Question Number : 123 Question Id : 6273 Question Type : MCQ Option Shuffling : No
Correct : 1.0 Wrong : 0.33

. Which amendment added Fundamental Duties to the Indian Constitution?

a. 37th Amendment act in 1975
b. 41st Amendment act in 1976
c. 38th Amendment act in 1975
d. 42nd Amendment Act in 1976

Options :

1. ✖ a
2. ✖ b
3. ✖ c
4. ✔ d

Question Number : 124 Question Id : 6274 Question Type : MCQ Option Shuffling : No
Correct : 1.0 Wrong : 0.33

What is ‘ Sustainability’ in economic growth?

a. When the booms and busts are evened out
b. Including both industrial and agricultural growth
c. Making growth equal for the rich and poor
d. Increasing GDP per capita by State control

Options :

1. ✖ a
2. ✔ b
3. ✖ c
4. ✖ d

Question Number : 125 Question Id : 6275 Question Type : MCQ Option Shuffling : No
Correct : 1.0 Wrong : 0.33

Which two countries have agreed to invest in the Indian Solar Energy expansion programme?

a. France and China

b. England and France

c. Singapore and China

d. China and USA

Options :

1. ✖ a
2. ✖ b
3. ✖ c
4. ✔ d

Question Number : 126 Question Id : 6276 Question Type : MCQ Option Shuffling : No
Correct : 1.0 Wrong : 0.33

What is the most important reason for the fast growth of e- commerce in Asia?

a. Median age of population is 24 years
b. Cheaper labour is available for managing
c. More population are a big consumer base
d. Lesser mobility of elderly population

Options :

1. ✔ a
2. ✖ b
3. ✖ c
4. ✖ d

Question Number : 127 Question Id : 6277 Question Type : MCQ Option Shuffling : No
Correct : 1.0 Wrong : 0.33

. Where will the Commonwealth Games 2018 be held?

a. Glasgow , Scotland

b. Inchon, South Korea

c. Gold Coast , Queensland ,Australia

d. Abuja, Nigeria

Options :

1. ✖ a
2. ✖ b
3. ✔ c
4. ✖ d

Question Number : 128 Question Id : 6278 Question Type : MCQ Option Shuffling : No
Correct : 1.0 Wrong : 0.33

To participate in the Olympics at Rio de Janeiro in 2016 which game did Indian team qualify in?

a. Men's Hockey
b. Swimming
c. Archery
d. Boxing

Options :

1. ✔ a
2. ✖ b
3. ✖ c
4. ✖ d

Question Number : 129 Question Id : 6279 Question Type : MCQ Option Shuffling : No
Correct : 1.0 Wrong : 0.33

Which latest development in the area of transport would help enhance trade between Bangladesh, China, Myanmar, India?

a. Waterway linkage across rivers

b. Opening of high altitude passes

c. High speed rail corridor

d. Rebuilding of the Stillwell road.

Options :

1. ✖ a
2. ✖ b
3. ✔ c
4. ✖ d

Question Number : 130 Question Id : 6280 Question Type : MCQ Option Shuffling : No

Correct : 1.0 Wrong : 0.33

For the development of which two cities as Smart cities will French collaboration be received ?

a. Chennai and Chandernagore

b. Puducheri and Nagpur .

c. Mahe and Puducheri .

d. Diu and Daman.

Options :

1. ✖ a
2. ✔ b
3. ✖ c
4. ✖ d

Question Number : 131 Question Id : 6281 Question Type : MCQ Option Shuffling : No
Correct : 1.0 Wrong : 0.33

. What is the Acronym of the application to view the space images developed by ISRO.

a. GAGAN

b. DEEP

c. VAYUYAN

d. SAKAAR

Options :

1. ✖ a
2. ✖ b
3. ✖ c
4. ✔ d

Question Number : 132 Question Id : 6282 Question Type : MCQ Option Shuffling : No
Correct : 1.0 Wrong : 0.33

. ¨ . During the rainy season, lightning is seen first and the thunder is heard afterwards because

a. Speed of light is higher than that of sound
b. Both travel first in lithosphere and then in the hydrosphere
c. Both travel in hydrosphere and then lithosphere
d. Speed of sound is higher than that of light

Options :

1. ✔ a
2. ✖ b
3. ✖ c
4. ✖ d

Question Number : 133 Question Id : 6283 Question Type : MCQ Option Shuffling : No

Correct : 1.0 Wrong : 0.33

. When a wooden ball weighing 500 gms is shot upward vertically through a mechanical device, it would gain

a. Force
b. Momentum
c. Speed
d. Inertia

Options :

1. ✖ a
2. ✖ b
3. ✖ c
4. ✔ d

Question Number : 134 Question Id : 6284 Question Type : MCQ Option Shuffling : No
Correct : 1.0 Wrong : 0.33

Which one of the following is not a direct outcome of global warming?

a. Eroding monuments
b. Melting glaciers
c. Vanishing beaches
d. Lowering ocean levels

Options :

1. ✖ a
2. ✔ b
3. ✖ c
4. ✖ d

Question Number : 135 Question Id : 6285 Question Type : MCQ Option Shuffling : No
Correct : 1.0 Wrong : 0.33

. Which is the gas used inside a electric bulb ?

a. Oxygen
b. Hydrogen
c. Inert Gas
d. Nitrogen

Options :

1. ✖ a
2. ✖ b
3. ✔ c
4. ✖ d

Question Number : 136 Question Id : 6286 Question Type : MCQ Option Shuffling : No
Correct : 1.0 Wrong : 0.33

. A jeweller assured you that the gold ornament you purchased is made of gold of 75 % purity. The degree of purity of the gold in terms of karats is

a. 18 Karat

b. 24 Karat

c. 22 Karat

d. 27 Karat

Options :

1. ✔ a
2. ✖ b
3. ✖ c
4. ✖ d

Question Number : 137 Question Id : 6287 Question Type : MCQ Option Shuffling : No Correct : 1.0 Wrong : 0.33

. Why is boiling drinking water a method of purification?

a. The cyst content and chlorine are reduced by heat

b. Boiling protects water from waterborne bacteria and viruses.

c. Organic and inorganic matter is removed

d. Water does not re-contaminate on cooling.

Options :

1. ✖ a
2. ✔ b
3. ✖ c
4. ✖ d

Question Number : 138 Question Id : 6288 Question Type : MCQ Option Shuffling : No Correct : 1.0 Wrong : 0.33

Which one has no sex chromosomes?

a. Ants Bees, wasps

b. Snakes, Crocodiles

c. Crows , Hens, Ducks

d. Dogs, wolf, Dingo

Options :

1. ✔ a
2. ✖ b
3. ✖ c
4. ✖ d

Question Number : 139 Question Id : 6289 Question Type : MCQ Option Shuffling : No
Correct : 1.0 Wrong : 0.33

To which part of the body does the blood from the pulmonary artery go?

a. Liver

b. Brain

c. Lungs

d. Kidneys

Options :
1. ✖ a
2. ✖ b
3. ✔ c
4. ✖ d

Question Number : 140 Question Id : 6290 Question Type : MCQ Option Shuffling : No
Correct : 1.0 Wrong : 0.33

What is the main function of niacin vitamin?

a. Increases hair growth

b. Increases iron absorption

c. Makes muscles strong

d. Helps reduce thickening of arteries

Options :
1. ✖ a
2. ✖ b
3. ✖ c
4. ✔ d

Question Number : 141 Question Id : 6291 Question Type : MCQ Option Shuffling : No
Correct : 1.0 Wrong : 0.33

D is the father of B's wife. C is the mother of E who is the son of B. If A is the brother of E, who is D to A?

a. Uncle b. Grandfather c. Grandson d. Son

Options :
1. ✖ a
2. ✔ b
3. ✖ c
4. ✖ d

Question Number : 142 Question Id : 6292 Question Type : MCQ Option Shuffling : No

Correct : 1.0 Wrong : 0.33

Three of the four number-pairs in the alternatives have numbers which hold the same relationship as the numbers in the number-pair given below. Find out the number-pair in which the two numbers do not hold the same relationship as the two numbers in the number-pair below.

65 : 7

a. 50 : 6 b. 37 : 5 c. 136 : 11 d. 82 : 8

Options :

1. ✖ a
2. ✖ b
3. ✔ c
4. ✖ d

Question Number : 143 Question Id : 6293 Question Type : MCQ Option Shuffling : No
Correct : 1.0 Wrong : 0.33

'Wish' is related to 'Desire' in the same way as 'Error' is related to:

a. Negligence b. Carelessness c. Mistake d. Blunder

Options :

1. ✖ a
2. ✖ b
3. ✖ c
4. ✔ d

Question Number : 144 Question Id : 6294 Question Type : MCQ Option Shuffling : No
Correct : 1.0 Wrong : 0.33

Three boys A, B and C and three girls P, Q and R are sitting around a circular table facing the center. No two boys or two girls are sitting next to each other. B is to the left of P. C is facing Q. Where is R sitting?

a. to the left of A b. to the left of C c. between A and B d. to the right of A

Options :

1. ✔ a
2. ✖ b
3. ✖ c
4. ✖ d

Question Number : 145 Question Id : 6295 Question Type : MCQ Option Shuffling : No
Correct : 1.0 Wrong : 0.33

Arrange the following words in a meaningful logical sequence and choose the appropriate number sequence from the alternatives.

1. Clearance 2. Dispatch 3. Postbox 4. Delivery 5. Letter 6. Sorting

a. 5, 3, 1, 2, 4, 6 b. 4, 6, 2, 1, 3, 5

c. 5, 3, 1, 6, 2, 4 d. 5, 3, 6, 1, 2, 4

Options :

1. ✖ a
2. ✖ b
3. ✔ c
4. ✖ d

Question Number : 146 Question Id : 6296 Question Type : MCQ Option Shuffling : No
Correct : 1.0 Wrong : 0.33

One term in the following number series is wrong. Find out the wrong term.

2, 8, 18, 32, 50, 74, 98

a. 18 b. 32 c. 50 d. 74

Options :

1. ✖ a
2. ✖ b
3. ✖ c
4. ✔ d

Question Number : 147 Question Id : 6297 Question Type : MCQ Option Shuffling : No
Correct : 1.0 Wrong : 0.33

In a certain code, '968' means 'market is crowded'; '497' means 'shop is closed' and '2853' means 'he went to market'. Which digit means 'crowded' in that code?

a.8 b. 6 c. 9 d. 5

Options :

1. ✖ a
2. ✔ b
3. ✖ c
4. ✖ d

Question Number : 148 Question Id : 6298 Question Type : MCQ Option Shuffling : No
Correct : 1.0 Wrong : 0.33

In a certain language, 'TRADER' is coded as 'USBEFS', then in that language, 'CIRCLE' would be coded as:

a. DJSDMF b. BHQBKD c. DJSDNG d. ICCREL

Options :

1. ✔ a
2. ✖ b
3. ✖ c
4. ✖ d

Question Number : 149 Question Id : 6299 Question Type : MCQ Option Shuffling : No
Correct : 1.0 Wrong : 0.33

A man is facing South. He turns 40^0 in anticlockwise direction and then turns 80^0 in clockwise direction. Finally, he turns 95^0 in clockwise direction. Which direction is he facing now?

a. North b. West c. North-West d. North-East

Options :

1. ✖ a
2. ✖ b
3. ✔ c
4. ✖ d

Question Number : 150 Question Id : 6300 Question Type : MCQ Option Shuffling : No
Correct : 1.0 Wrong : 0.33

The numbers in the matrix given below follow a certain trend row-wise and and/or column wise. Study the trend and choose the number which will replace the question mark.

5	7	9
3	4	6
34	65	?

a. 108 b. 97 c. 225 d. 117

Options :

1. ✖ a
2. ✖ b
3. ✖ c
4. ✔ d