SHORT ANSWER TYPE QUESTIONS

11. In the figure, find the value of BC.

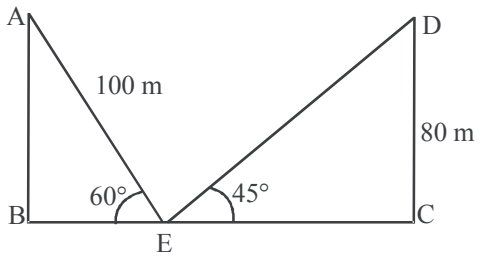

12. In the figure, two persons are standing at the opposite direction P & Q of the tower. If the height of the tower is 60 m then find the distance between the two persons.

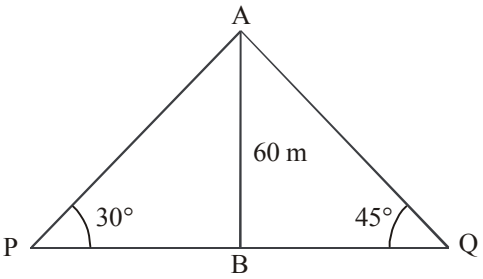

13. In the figure, find the value of AB.

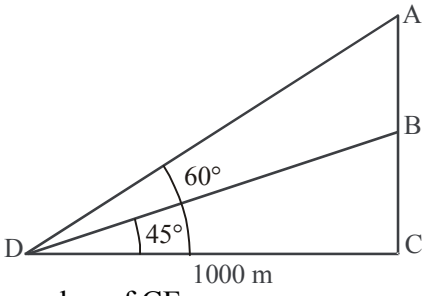

14. In the figure, find the value of CF.

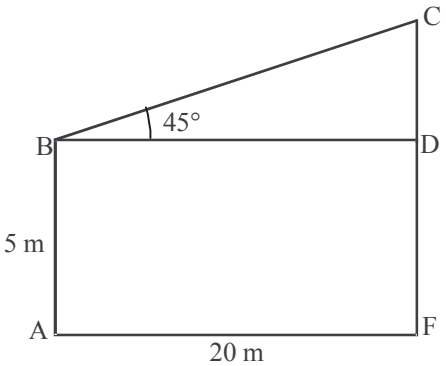

15. If the horizontal distance of the boat from the bridge is 25 m and the height of the bridge is 25 m, then find the angle of depression of the boat from the bridge.

16. If the length of the shadow of a tower is increasing, then the angle of elevation of the sun is also increasing. (True / False)

17. If a man standing on the deck of a ship 3 m above the surface of sea observes a cloud and its reflection in the sea, then the angle of elevation of the cloud is equal to the angle of depression of its reflection. (True / False)

18. The string of a kite is 150 m long and it makes an angle 60° with the horizontal. Find the height of the kite above the ground. (Assume string to be tight)

19. The shadow of a vertical tower on level ground increases by 10 m when the altitude of the sun changes from 45° to 30°. Find the height of the tower.

(Use $\sqrt{3} = 1.73$)

20. An aeroplane at an altitude of 200 m observes angles of depression of opposite points on the two banks of the river to be 45° and 60°, find the width of the river. (Use $\sqrt{3} = 1.732$)

21. The angle of elevation of a tower at a point is 45°. After going 40 m towards the foot of the tower, the angle of elevation of the tower becomes 60°. Find the height of the tower. (Use $\sqrt{3} = 1.732$)

22. The upper part of a tree broken over by the wind makes an angle of 30° with the ground and the distance of the foot of the tree from the point where the top touches the ground is 25 m. What was the total height of the tree?

23. A vertical flagstaff stands on a horizontal plane. From a point 100 m from its foot, the angle of elevation of its top is found to be 45°. Find the height of the flagstaff.

24. The length of a string between kite and a point on the ground is 90 m. If the string makes an angle α with the level ground and $\sin\alpha = \frac{3}{5}$. . Find the height of the kite. There is no slack in the string.

25. An aeroplane, when 3000 m high, passes vertically above another plane at an instant when the angle of elevation of two aeroplanes from the same point on the ground are 60° and 45° respectively. Find the vertical distance between the two planes. (Use $\sqrt{3} = 1.732$)

26. A 7 m long flagstaff is fixed on the top of a tower on the horizontal plane. From a point on the ground, the angle of elevation of the top and the bottom of the flagstaff are 45° and 30° respectively. Find the height of the tower.

(Use $\sqrt{3} = 1.732$)

27. From the top of a 7 m high building, the angle of elevation of the top of the tower is 60° and the angle of depression of the foot of the tower is 45°. Find the height of the tower. **(CBSE 2020)**

28. Anand is watching a circus artist climbing a 20m long rope which is tightly stretched and tied from the top of vertical pole to the ground. Find the height of the pole if the angle made by the rope with the ground level is 30°.

LONG ANSWER TYPE QUESTIONS

29. A statue 1.6 m tall, stands on the top of a pedestal. From a point on the ground, the angle of elevation of the top of the statue is 60° and from the same point the angle of elevation of the top of the pedestal is 45°. Find the height of the pedestal.

(Use $\sqrt{3} = 1.73$) (CBSE 2020)

30. A man standing on the deck of a ship, 10 m above the water level observes the angle of elevation of the top of a hill as 60° and angle of depression of the bottom of the hill as 30°. Find the distance of the hill from the ship and height of the hill.

31. From a window 60 m high above the ground of a house in a street, the angle of elevation and depression of the top and the foot of another house on the opposite side of the street are 60° and 45° respectively. Show that the height of opposite house is $60(1+\sqrt{3})$ metres.

32. The angle of elevation of an aeroplane from a point A on the ground is 60°. After a flight of 30 seconds, the angle of elevation changes to 30°. If the plane is flying at a constant height of $3600\sqrt{3}$ m, find the speed in km/hour of the plane.

33. A bird is sitting on the top of a tree, which is 80 m high. The angle of elevation of the bird, from a point on the ground is 45°. The bird flies away from the point of observation horizontally and remains at a constant height. After 2 seconds, the angle of elevation of the bird from the point of observation becomes 30°. Find the speed of flying of the bird. (Use $\sqrt{3} = 1.732$)

34. The angles of elevation of the top of a tower from two points on the ground at distances 9 m and 4 m from the base of the tower are in the same straight line with it are complementary. Find the height of the tower.

35. The angle of elevation of the top of a building from the foot of a tower is 30°. The angle of elevation of the top of the tower from the foot of the building is 60°. If the tower is 60 m high, find the height of the building. **(CBSE 2020)**

36. An observer from the top of a light house, 100 m high above sea level, observes the angle of depression of a ship, sailing directly towards him, changes from 30° to 60°. Determine the distance travelled by the ship during the period of observation. (Use $\sqrt{3} = 1.732$)

37. The angles of elevation and depression of the top and bottom of a light house from the top of a building 60 m high are 30° and 60° respectively. Find

(i) The difference between the height of the light house and the building.

(ii) distance between the light house and the building.

38. A fire in a building 'B' is reported on telephone in two fire stations P an Q, 20 km apart from each other on a straight road. P observes that the fire is at an angle of 60° to the road, and Q observes, that it is at an angle of 45° to the road. Which station should send its team to start the work at the earliest and how much distance will this team has to travel?

39. A 1.2m tall girl spots a balloon on the eve of Independence Day, moving with the wind in a horizontal line at a height of 88.2 m from the ground. The angle of elevation of the balloon from the girl at an instant is 60°. After some time, the angle of elevation reduces to 30°. Find the distance travelled by the balloon.

40. The angle of elevation of the cloud from a point 10 m above a lake is 30° and the angle of depression of the reflection of the cloud in the lake is 60°. Find the height of the cloud from the surface of lake. **(CBSE 2020)**

41. Two pillars of equal heights stand on either side of a roadway 150 m wide. From a point on the roadway between the pillars, the angles of elevation of the top of the pillars are 60° and 30°. Find the height of pillars and the position of the point. **(CBSE, 2011)**

42. The angle of elevation of the top of tower from certain point is 30°. If the observer moves 20 m towards the tower the angle of elevation of the top increases by 15°. Find the height of the tower.

43. A moving boat is observed from the top of a 150 m high cliff moving away form the cliff. The angle of depression of the boat changes form 60° to 45° in 2 minutes. Find the speed of the boat in m/h. (Take $\sqrt{3} = 1.732$)

44. From the top of a 120 m high tower a man observes two cars on the opposite sides of the tower and in straight line with the base of tower with angles of depression as 60° and 45°. Find the distance between the cars.

(Use $\sqrt{3} = 1.732$)

45. A vertical tower of height 20 m stands on a horizontal plane and is surmounted by a vertical flag-staff of height h. At a point on the plane, the angle of elevation of the bottom and top of the flag staff are 45° and 60° respectively. Find the value of h. **(CBSE 2020)**

46. The rod AC of a TV disc antenna is fixed at right angles to the wall AB and a rod CD is supporting the disc as shown in the figure. If AC = 1.5 m long and CD = 3 m, find (*i*) tan θ (*ii*) sec θ + cosec θ. **(CBSE 2020)**

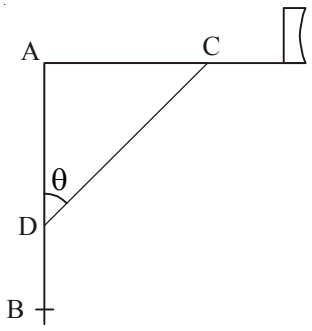

ANSWERS AND HINTS

1. (b) **2.** (c)

3. (b) **4.** (c)

5. (c) **6.** 50 m

7. 60° **8.** 30°

9. 100 m **10.** $20\left(\sqrt{3}+1\right)$ m

11. 130 m **12.** $60\left(\sqrt{3}+1\right)$ m

13. $1000\left(\sqrt{3}-1\right)$m

14. 25 m

15. 45°

16. False

17. False

18. $75\sqrt{3}$ m

19. 13.65 m

20. 315.46 m

21. 94.64 m

22. $25\sqrt{3}$ m

23. 100 m

24. 54 m

25. 1268 m

26. 9.562 m

27. $7(\sqrt{3}+1)$ m

28. 10 m

29. 2.184 m

30. $10\sqrt{3}$ m, 40 m

32. 864 km/hr

33. 29.28 m

34. 6 m

35. 20 m

36. 115.46 m

37. 20 m, $20\sqrt{3}$ m

38. Station P, 7.4 km (approx)

39. $58\sqrt{3}m$

40. 20 m

41. height = 64.95 m, distance (Position) = 112.5 m from the pillar having angle of elevation 60°

42. $10(\sqrt{3}+1)\ m$

43. 1902 m/h (approx.)

44. 189.28 m

45. h = $20(\sqrt{3}-1)$ m

46. (*i*) $\tan\theta = \frac{1}{\sqrt{3}}$

(*ii*) $\sec\theta + \operatorname{cosec}\theta = \frac{2}{\sqrt{3}} + 2$

PRACTICE-TEST

Some Applications of Trigonometry

Time : 1 Hr. ***M.M.: 20***

SECTION-A

1. A pole which is 6 m high cast a shadow $2\sqrt{3}$ on the ground. What is the sun's angle of elevation. **1**

2. The height of a tower is 100 m. When the angle of elevation of sun is 30°, then what is the shadow of the tower? **1**

3. The angle of elevation of the sun, when the shadow of a pole h meters high is $\sqrt{3}\,h$ is.

   (*a*) 30° (*b*) 45° (*c*) 60° (*d*) 90° **1**

4. An observer 1.5 metre tall is 20.5 metre away from a tower 22 metres high. The angle of elevation of the top of the tower from the eye of the observer is,

   (*a*) 30° (*b*) 45° (*c*) 60° (*d*) 0° **1**

SECTION-B

5. From a point on the ground 20 m away from the foot of a tower the angle of elevation is 60°. What is the height of tower? **2**

6. The ratio of height and shadow of a tower is $1:\frac{1}{\sqrt{3}}$ .What is the angle of elevation of the sun? **2**

7. The angle of elevation of the top of a tower is 30°. If the height of the tower is tripled, then prove that the angle of elevation would be doubled. **2**

SECTION-C

8. The tops of the two towers of height x and y standing on level ground, subtend angles of 30° and 60° respectively at the centre of the line joining their feet, then find $x : y$.

3

9. The angle of elevation of the top of a rock from the top and foot of a 100 m high tower are 30° and 45° respectively. Find the height of the rock. **3**

SECTION-D

10 A man standing on the deck of a ship, 10 m above the water level observes the angle of elevation of the top of a hill as 60° and angle of depression of the base of the hill as 30°. Find the distance of the hill from the ship and height of the hill. **4**