12TH INTERNATIONAL JUNIOR SCIENCE OLYMPIAD

IJSO-2015



December 2(Wed)-11(Fri), 2015 I Daegu, Republic of Korea

Theoretical Competition

– Exam Sheet –

December 6, 2015

Do NOT turn to next page
before a whistle is blown.
Otherwise, you will receive a penalty.

1. You have 5 minutes to read "EXAMINATION RULES", "EXAM INSTRUCTIONS", and "CALCULATOR INSTRUCTIONS" on pages 1 - 3.

2. Do NOT start answering the questions before the "START" whistle is blown! Otherwise, you will receive a penalty.

EXAMINATION RULES

1. You are NOT allowed to bring any personal items into the examination room, except for personal medicine or approved personal medical equipment.
2. You must sit at your designated desk.
3. Check the stationery items (pen, calculator, and rough book) provided by the organizers.
4. Do NOT start answering the questions before the **"START"** whistle.
5. You are NOT allowed to leave the examination room during the examination except in an emergency in which case you will be accompanied by a supervisor/volunteer/invigilator.
6. Do NOT disturb other competitors. If you need any assistance you may raise your hand and wait for a supervisor to come.
7. Do NOT discuss the examination questions. You must stay at your desk until the end of the examination time, even if you have finished the exam.
8. At the end of the examination time you will hear the **"STOP"** whistle. Do NOT write anything more on the answer sheet after this stop whistle. Arrange the exam, answer sheets, and the stationary items (pen, calculator, and rough book) neatly on your desk. Do NOT leave the room before all the answer sheets have been collected.

EXAM INSTRUCTIONS

1. After the "START" whistle, you will have 3 hours 30 minutes to complete the exam.
2. ONLY use the pen provided by the organizers (not pencil).
3. You have **13** pages of answer sheets. Raise your hand, if you find any missing sheets.
4. NOW write your name, code, country and signature in your first answer sheet, and your name and code in the next pages of your answer sheets.
5. Read carefully the problems and write the correct answers in the corresponding boxes of the answer sheet.
6. When units are provided in the answer sheets, you have to write the answers correctly for the units.
7. Only the answer sheets will be evaluated. Before writing your answers on the answer sheets, use the rough book provided.
8. Point rules : Each question marking
9. The total number of questions is 6. Check that you have a complete set of the test questions sheet (12 pages, page 5 – page 16) after the **"START"** whistle is blown. Raise your hand, if you find any missing sheets.

CALCULATOR INSTRUCTIONS

1. Turning on: Press [ON/C].

2. Turning off: Press [2ndF] [ON/C].

3. Clearing data: Press [ON/C].

4. Addition, subtraction, multiplication, division

Example 1) $45 + \frac{285}{3}$

[ON/C] *45* [+] *285* [÷] *3* [=] ***140.***

Example 2) $\frac{18+6}{15-8}$

[ON/C] [(] *18* [+] *6* [)] [÷] [(] *15* [−] *8* [)] [=]

3.428571429

Example 3) $42 \times (-5) + 120$

[ON/C] *42* [×] *5* [+/−] [+] *120* [=] ***-90.***

[ON/C] *42* [×] [(] [−] *5* [)] [+] *120* [=] ***-90.***

5. Exponential

Example 1) 8.6^{-2}

[ON/C] *8.6* [y^x] *2* [+/−] [=] ***0.013520822***

Example 2) 6.1×10^{23}

[ON/C] *6.1* [×] *10* [y^x] *23* [=] ***6.1 x 10²³***

6. To delete a number/function, move the cursor to the number/function you wish to delete, then press [DEL]. If the cursor is located at the right end of a number/function, the [DEL] key will function as a back space key.

Do NOT turn to next page
Before the "START" whistle is blown.
Otherwise, you will receive a penalty.

I. Chemical Oxygen Demand (COD) Test

The chemical oxygen demand (COD) test is commonly used for indirectly measuring the amount of organic compounds in water. Most applications of COD are related to determining the amount of organic pollutants found in surface water (e.g. lakes and rivers) or wastewater, making COD a useful measure of water quality. It is expressed in ppm (parts per million), which indicates *the mass of oxygen molecules (in mg) consumed for oxidizing the pollutants per liter of solution*. The basis for the COD test is that nearly all organic compounds can be fully oxidized to CO_2 with a strong oxidizing agent under acidic conditions.

The amount of oxygen molecules required to oxidize an organic compound to CO_2 and water is given by:

$$C_aH_bO_c + x\,O_2 \longrightarrow a\,CO_2 + \frac{b}{2}H_2O \qquad (1)$$

Potassium dichromate ($K_2Cr_2O_7$) is a strong oxidizing agent and is used to oxidize organic compounds in the COD determination under acidic conditions. The net reaction of $K_2Cr_2O_7$ with an organic compound is given by:

$$C_aH_bO_c + y\,Cr_2O_7^{2-} + z\,H^+ \longrightarrow a\,CO_2 + \frac{b+z}{2}H_2O + 2y\,Cr^{3+} \qquad (2)$$

The general procedure for the COD test can be described as follows.

(A) A solution of $K_2Cr_2O_7$ (with a known concentration) is added to a solution containing organic pollutants. $K_2Cr_2O_7$ oxidizes the organic pollutants by the reaction (2).

(B) After completely oxidizing the organic pollutants, the remaining [$K_2Cr_2O_7$] is determined by titration with Fe^{2+}. In the titration, Fe^{2+} is oxidized to Fe^{3+} and $Cr_2O_7^{2-}$ is reduced to Cr^{3+}. This titration will let you know the amount of $Cr_2O_7^{2-}$ used to oxidize the pollutants in the solution.

(C) Using the amount of $K_2Cr_2O_7$ obtained in step (B), the theoretical amount of oxygen molecules required to oxidize the same amount of the pollutants can be calculated by comparing x and y in equations (1) and (2). This is called COD.

[Questions]

I-1. To determine the COD from the consumed $K_2Cr_2O_7$ for oxidizing organic pollutants, the mole ratio between O_2 and $K_2Cr_2O_7$ for oxidizing 1 mole of organic pollutant is required. The mole ratio can be determined by comparing x and y in equations (1) and (2) after balancing them. The following procedure is useful.

I-1-1. [0.5 points] Express x in terms of a, b, and c by balancing the equation (1).

I-1-2. [0.5 points] Express z in terms of y by balancing the charge in the equation (2).

I-1-3. [0.5 points] Express y in terms of a, b, and c by balancing the equation (2).

I-1-4. [0.5 points] Express x in terms of y by comparing your answers.

I-2. To determine the COD of an aqueous solution containing an unknown pollutant, 2.60×10^{-4} mol of $K_2Cr_2O_7$ was added to 10.0 mL of the pollutant solution. After the oxidation was completed, 1.20×10^{-3} mol of Fe^{2+} was required to titrate the remaining $K_2Cr_2O_7$.

I-2-1. [1.0 point] In the following balanced equation for the reaction between $Cr_2O_7^{2-}$ and Fe^{2+} in acidic media, what is the coefficient f?

$$Cr_2O_7^{2-} + f\ Fe^{2+} + 14\ H^+ \longrightarrow 2\ Cr^{3+} + f\ Fe^{3+} + 7\ H_2O$$

I-2-2. [1.0 point] How many moles of $K_2Cr_2O_7$ were consumed for oxidizing the pollutants in 10.0 mL of the polluted solution?

I-2-3. [1.0 point] What is the COD of the unknown sample in ppm? The molecular mass of O_2 is 32.0 g/mol.

I-2-4. [2.0 points] If the unknown pollutant was C_6H_6, what was the amount of pollutant in milligrams per liter of solution and the volume of CO_2 produced during the complete oxidation of the 1.00 liter solution at 298 K and 1.00 atm. Molecular mass of C_6H_6 is 78.0 g/mol and the gas constant R = 0.0821 L·atm/mol·K. (Assume that CO_2 is an ideal gas.)

I-2-5. [1.0 point] How many moles of Cr^{3+} existed right before and after the titration with Fe^{2+}?

I-3. [2.0 points] When 10 mg of each of the following compounds is completely dissolved in 1.0 L of water, which compound produces the highest COD and what is its COD value? (The atomic masses of C, H, and O are 12, 1.0, and 16 g/mol, respectively.)

HCOOH (formic acid)	CH_3OH (methanol)	CH_3CHO (acetaldehyde)

II. Ski Jumping

The 2018 Winter Olympics will take place on February 2018, in PyeongChang, Republic of Korea. One of the Winter Olympic competitions is ski jumping, where the skier descends a specially constructed take-off ramp (known as the in-run), then jumps from the launcher (jumping point) with as much speed as he/she can generate, and flies as far as possible down a steeply sloped hill. Figure II-1 shows an outline of a ski jumping hill, divided into four parts: in-run, jump, flight, and landing.

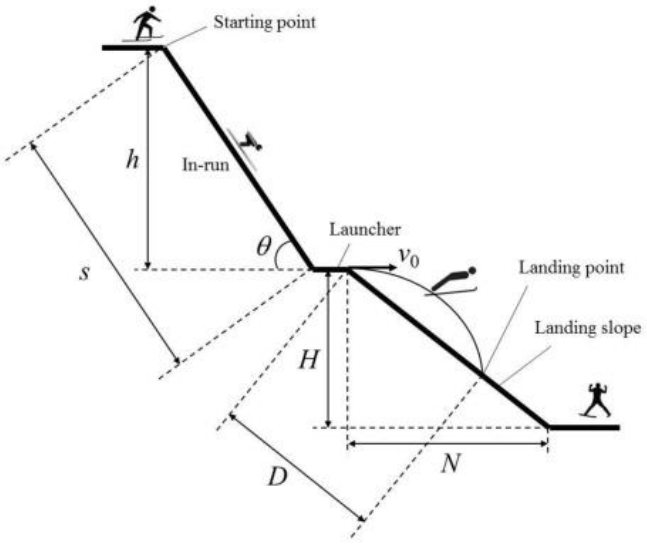

Figure II-1. Ski jumping

During the in-run the skier tries to maximize their acceleration by minimizing the friction in order to obtain the maximum in-run speed. This, in turn, has a significant influence on the jump length. θ, s, and h are the inclination angle, length, and height of the in-run, respectively. H and N are the height and horizontal length of the landing slope, respectively. Therefore, the gradient (k) of the landing slope is $\mathrm{k} = \frac{H}{N}$. We use g for the gravitational acceleration. Assume that the velocity (v_o) of the skier off the launcher is horizontal.

[Questions]

II-1. [0.75 points] Which of the following numbers represented the directions of the gravitational force, normal force, and air resistance, respectively, exerted on the skier during the in-run?

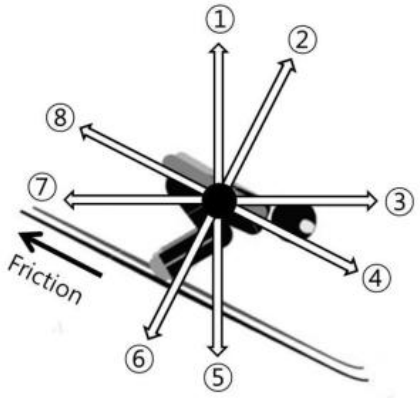

II-2. [1.5 points] If the speed of the skier is v at the bottom of the in-run, what is the coefficient (μ) of the kinetic friction between the ski and the snow? Express μ in terms of h, g, s, v, and θ. (Ignore the air resistance and lift.)

II-3. [1.5 points] If the launching speed of the skier is v_0, what is the flight time (t) from the launcher to the landing point? Express t in terms of k, g, and v_0. (Ignore the air resistance and lift.)

II-4. [1.25 points] What is the distance (D) between the launcher and the landing point? Express D in terms of k, g, and v_0. (Ignore the air resistance and lift.)

III. Thomson's Cathode-Ray Experiment

[Thomson's Experiment]

In 1897, Thomson showed that a cathode ray is composed of negatively charged particles, electrons, which he calculated must have bodies much smaller than atoms and a very large value for their charge-to-mass (e/m) ratio, where e and m are the charge and mass of the electron, respectively.

Figure III-1 represents a schematic of Thomson's cathode-ray experiment to measure e/m for an electron. In a highly evacuated vacuum tube, two sets of metal electrodes (L_1-M_1 and L_2-M_2) are placed normal to each other. The potential differences are V_1 between L_1 and M_1, and V_2 between L_2 and M_2, respectively. In the space between L_2 and M_2, a uniform magnetic field with strength B is directed perpendicular to the plane of the figure, pointing into the page (depicted by 'X' in the figure).

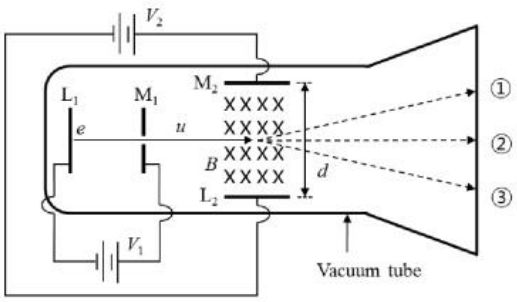

Figure III-1. Thomson's experiment

When L_1 is heated, the electrons from the hot cathode (L_1) are accelerated by V_1 and pass with a speed of u through the slit in M_1. The electrons continue to fly in the region between L_2 and M_2 and finally strike the screen at the end of the tube. During the flight of the electrons between L_2 and M_2, separated by the distance d, only electric (field strength V_2/d) and magnetic (field strength B) forces exert on the electrons.

[Charge in Electric and Magnetic Fields]

Figure III-2 shows a particle with charge q in a uniform electric field between two parallel electrodes. The electric field strength (E) is determined by the distance (d) and electric potential difference (V) between the two electrodes as in equation (1). When the particle is placed in the electric field, the magnitude of the force exerted on the particle is given by equation (2). For a **positively**-charged particle, the potential energies of the particle are qV and 0 at the (+) and (−) electrodes, respectively.

$$E = \frac{V}{d} \quad (1)$$

$$F_{\text{electric}} = qE \quad (2)$$

Figure III-3 shows a **positively**-charged particle with charge q and speed u in a uniform magnetic field of field strength B. In the figure, the magnetic field is directed perpendicular to the plane of the figure, pointing out of the page (depicted by '∘' in the figure). In this arrangement, the direction of the force exerted on the particle is upward and its magnitude is given by

$$F_{\text{magnetic}} = quB \quad (3)$$

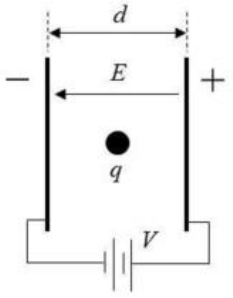

Figure III-2. Charge in electric field

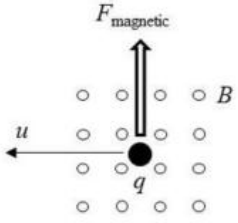

Figure III-3. Positive charge in magnetic field

[Questions] Answer the following questions about Thomson's experiment (**Figure III-1**).

III-1. [1.0 point] Express the speed of the electron u in terms of e, m, and V_1, at the moment the electron passes through the slit in M_1.

III-2. After the electron passes through the region between L_2 and M_2,

III-2-1. [1.0 point] If only an electric field is present, i.e. $V_2 \neq 0$ and $B = 0$, which of ①, ②, and ③ in Figure III-1 would be the trace of the electron?

III-2-2. [1.0 point] If only a magnetic field is present, i.e. $V_2 = 0$ and $B \neq 0$, which of ①, ②, and ③ in Figure III-1 would be the trace of the electron?

III-3. [1.5 points] Thomson adjusted the electric ($V_2 \neq 0$) and magnetic ($B \neq 0$) fields to let the electrons fly straight (trace ②) with a constant speed of u. Under this condition, what would be the speed of the electron u? Express u in terms of V_2, B, and d.

III-4. [0.5 points] Compare the results of **III-1** and **III-3**, then express the charge-to-mass ratio (e/m) for the electron in terms of V_1, V_2, B, and d.

IV. Excretory System

The table shows the constituents of samples collected from the nephron of a healthy human.

(unit: g/100mL)

Constituents	Blood plasma	Primitive urine (glomerular filtrate)	Urine
Water	90 ~ 93	90 ~ 93	95
X	8	0	0
Y	0.1	0.1	0
Minerals	0.9	0.9	0.9 ~ 3.6
Z	0.03	0.03	2.0

The figure shows an artificial hemodialyzer. (The permeability of the glomerular membrane and the hemodialyzer membrane is same.)

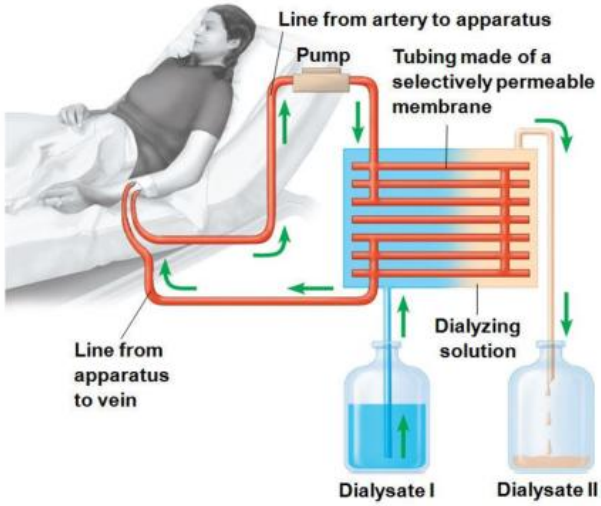

[Questions]

IV-1. [1.0 points] Which of the three parts of kidney indicated below plays a similar role as an artificial hemodialyzer?

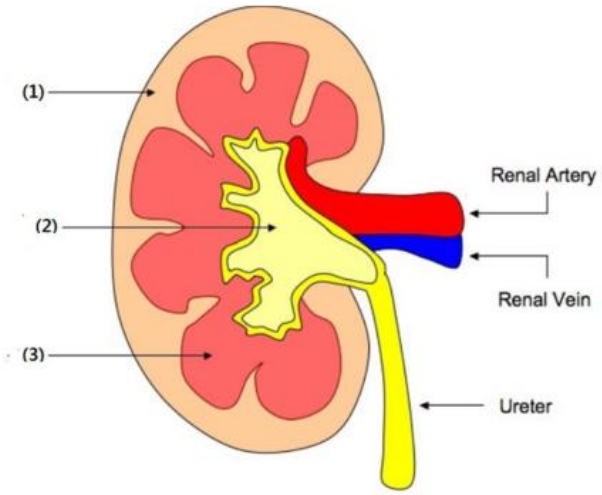

IV-2. [1.5 points] What are the concentrations of X, Y, and Z in dialysate I? (each answer 0.5 points)

IV-3. [1.5 points] Through which of the following processes (I, II and III) in a healthy human kidney do substances X, Y and Z go? (More than one option may be possible). (Each answer 0.5 points)

I. Reabsorption	II. Filtration	III. Neither reabsorption or filtration

V. Genetics

While studying a common genetic condition in one family, it was found that the mutant allele differed from the wild-type allele by a single base-pair (bp) substitution. It was also noticed that this substitution removed the restriction enzyme I recognition site that is present in the wild-type allele. (This restriction enzyme recognizes a specific DNA sequence and cuts it. This sequence is called the 'restriction enzyme recognition site'.) Figure V-1 is the pedigree of the family showing this genetic condition.

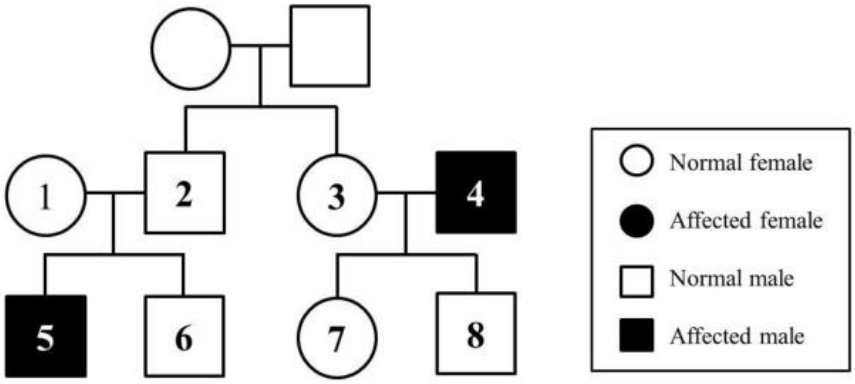

Figure V-1. Pedigree

After isolating DNA from four individuals (5, 6, 7, and 8) in the pedigree, 1500 bp of the DNA from each individual was amplified, including the site affected by the mutation, with a modern DNA technique. The amplified DNA was digested using the restriction enzyme I, and the resulting sizes of the DNA fragments were analyzed. The results of the DNA digestion experiments are summarized in Table V-1.

Table V-1. Results of DNA digestion experiments

Individuals		5	6	7	8
Fragment sizes	1500bp	+	–	+	+
	900bp	–	+	+	+
	600bp	–	+	+	+

(+ : present, – : absent)

[Questions]

V-1. [1.0 point] Based on the data, which of the following is the mode of inheritance of the genetic condition?

① X-linked dominant	② X-linked recessive	③ Y-linked dominant
④ Y-linked recessive	⑤ Autosomal dominant	⑥ Autosomal recessive
⑦ Mitochondrial inheritance		

V-2. [1.0 point] If individuals 1 and 2 have another child, what is the probability that this child will be an affected female?

V-3. [1.0 point] The region around the restriction enzyme I recognition site in the amplified DNA from the wild type and the corresponding region in the amplified DNA of the mutant type were sequenced and compared. The experiment revealed that the mutation not only removed the restriction enzyme I recognition site in the mutant allele but also created a new restriction enzyme II recognition site. The recognition sites for the two restriction enzymes are indicated below.

Restriction enzyme I recognizes: 5'-TACGGT-3'
Restriction enzyme II recognizes: 5'-AGGTCA-3'

Based on the results, if a portion of one strand of the wild-type DNA sequence determined here is [5'-----TACGGTCA-----3'], what is the sequence of the corresponding portion of DNA in the mutant allele ?

VI. Blood Circulation

Figure VI-1 shows the changes of pressure and blood volume in the left ventricle over time.

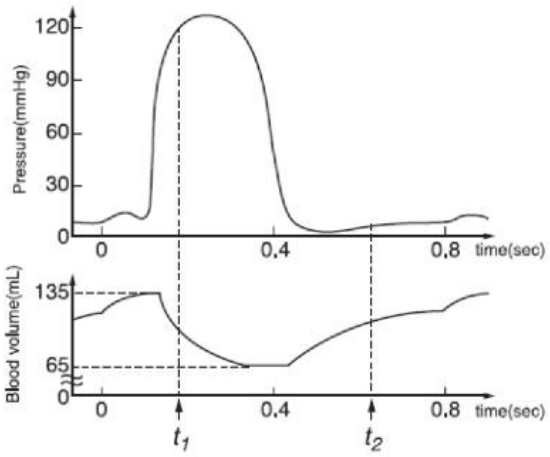

Figure VI-1. Changes of blood pressure and volume over time

[Questions]

VI-1. [1.0 point] At t_1 and t_2, indicate whether the left semilunar valve and left atrioventricular valve are open or closed. (Mark '○' for open and '×' for closed on the answer sheet.)

VI-2. [1.0 point] What is the heart rate (beats per min) depicted in Figure VI-1? (Answer it to a precision of two significant figures.)

VI-3. [1.0 point] The cardiac output is defined as the volume of blood pumped per ventricle per unit time. Calculate the cardiac output (L/min) in this condition? (Answer it to a precision of two decimal points.)

ANSWER SHEET

Name		Code	
Country		Signature	

I. Chemical Oxygen Demand (COD) Test

Questions		Points	Answers
I-1	I-1-1	0.5	(Show your working)
			x =
	I-1-2	0.5	(Show your working)
			z =

ANSWER SHEET

Name		Code	

I. Chemical Oxygen Demand (COD) Test (Continued)

Questions		Points	Answers
I-1	I-1-3	0.5	(Show your working) y =
	I-1-4	0.5	(Show your working) x =

ANSWER SHEET

Name		Code	

I. Chemical Oxygen Demand (COD) Test (Continued)

Questions		Points	Answers
I-2	I-2-1	1.0	(Show your working) f =
	I-2-2	1.0	(Show your working) Number of moles = mol

ANSWER SHEET

Name		Code	

I. Chemical Oxygen Demand (COD) Test (Continued)

Questions		Points	Answers
I-2	I-2-3	1.0	(Show your working)
			COD = ppm
	I-2-4	2.0	(Show your working)
			Amount of C_6H_6 = mg/L
			Volume of CO_2 = L

ANSWER SHEET

Name		Code	

I. Chemical Oxygen Demand (COD) Test (Continued)

Questions	Points	Answers
I-2-5	1.0	(Show your working) Moles of Cr^{3+} right before titration : mol Moles of Cr^{3+} after titration : mol

ANSWER SHEET

Name		Code	

I. Chemical Oxygen Demand (COD) Test (Continued)		
Questions	**Points**	**Answers**
I-3	2.0	(Show your working) Compound Name : COD = ppm

---------- DO NOT WRITE BELOW ----------

Total points for question I	

ANSWER SHEET

Name		Code	

II. Ski Jumping

Questions	Points	Answers	
II-1		Forces	Choose one for each force from ① to ⑧
	0.25	Gravitational force	
	0.25	Normal force	
	0.25	Air resistance	
II-2	1.5	(Show your working)	
		$\mu =$	

ANSWER SHEET

Name		Code	

II. Ski Jumping (Continued)		
Questions	**Points**	**Answers**
II-3	1.5	(Show your working)
		t = □□□□□
II-4	1.25	(Show your working)
		D = □

---------- DO NOT WRITE BELOW ----------

Total points for question II	

ANSWER SHEET

Name		Code	

III. Thomson's Cathode-Ray Experiment

Questions		Points	Answers	
III-1		1.0	(Show your working)	
			u =	
III-2	III-2-1	1.0	Choose one from ① to ③	
	III-2-2	1.0	Choose one from ① to ③	
III-3		1.5	(Show your working)	
			u =	

ANSWER SHEET

Name		Code	

III. Thomson's Cathode-Ray Experiment (Continued)		
Questions	**Points**	**Answers**
III-4	0.5	(Show your working) e/m =

---------- DO NOT WRITE BELOW ----------

Total points for question III	

ANSWER SHEET

Name		Code	

IV. Excretory System				
Questions	**Points**	**Answers**		
IV-1	1.0			
IV-2	1.5	X	Y	Z
		g/100mL	g/100mL	g/100mL
IV-3	1.5	X	Y	Z

---------- DO NOT WRITE BELOW ----------

Total points for question IV	

ANSWER SHEET

Name		Code	

V. Genetics			
Questions	**Points**	**Answers**	
V-1	1.0	Multiple Choice (Choose one from ① to ⑦)	
V-2	1.0	(Show your working)	
		Probability :	
V-3	1.0	Sequence	**[5'----** **----3']**

---------- DO NOT WRITE BELOW ----------

Total points for questions V	

ANSWER SHEET

Name		Code	

VI. Blood Circulation

Questions	Points	Answers		
VI-1	1.0		Left semilunar valve (Mark either '○' or '×')	Left atrioventricular valve (Mark either '○' or '×')
		t_1		
		t_2		
VI-2	1.0	(Show your working)		
		Heart rate: beats/min		
VI-3	1.0	(Show your working)		
		Cardiac output : L/min		

---------- DO NOT WRITE BELOW ----------

Total points for question VI	

12TH INTERNATIONAL JUNIOR SCIENCE OLYMPIAD

IJSO-2015



December 2(Wed)-11(Fri), 2015 I Daegu, Republic of Korea

Theoretical Competition

– Solution –

December 6, 2015

I. Chemical Oxygen Demand (COD) Test

I-1

I-1-1 [0.5 points]

(Answer) $a + b/4 - c/2$

(Explanation) Balance the masses of O for both sides.

$c + 2x = 2a + 0.5b$ **[0.3 points]**

$x = a + 0.25b - 0.5c$ **[0.2 points]**

I-1-2. [0.5 points]

(Answer) $8y$

(Explanation) Balance the charges for both sides.

$(-2)y + (+1)z = 2y(+3)$ **[0.3 points]**

$z = 8y$ **[0.2 points]**

I-1-3. [0.5 points]

(Answer) $2a/3 + b/6 - c/3$

(Explanation)

$$C_aH_bO_c + yCr_2O_7^{2-} + zH^+ \rightarrow aCO_2 + \left(\frac{b+z}{2}\right)H_2O + 2yCr^{3+}$$

Balance the masses of O.

$c + 7y = 2a + 0.5b + 0.5z$ **[0.2 points]**

Substitute $8y$ for z

$3y = 2a + 0.5b - c$ **[0.2 points]**

$y = 2a/3 + b/6 - c/3$ **[0.1 points]**

I-1-4. [0.5 points]

(Answer) $3y/2$

(Explanation)

From the former questions,

$x = a + b/4 - c/2$ **[0.1 points]**

$y = 2a/3 + b/6 - c/3 = (2/3) \times (a + b/4 - c/2)$ **[0.2 points]**

Therefore, $x = 3y/2$ **[0.2 points]**

I-2

I-2-1. [1.0 point]

(Answer) 6

(Explanation)

(Method 1) Balance the charge sums on both sides.

$-2 + 2f + 14 = +6 + 3f$ **[0.5 points]**

$f = 6$ **[0.5 points]**

(Method 2) The electron flows for the redox pairs can be compared

Oxidation) $f\,Fe^{2+} \rightarrow f\,Fe^{3+} + f\,e^-$ number of electrons released: f **[0.2 points]**

Reduction) $Cr_2O_7^{2-} + 6e^- \rightarrow 2Cr^{3+}$ number of electrons consumed: 6 **[0.3 points]**

$f = 6$ **[0.5 points]**

I-2-2. [1.0 point]

(Answer) 6.0×10^{-5}

(Explanation)

The titration in the step (B) involves the redox reaction of Fe and Cr.

$$6Fe^{2+} + Cr_2O_7^{2-} \rightarrow 6Fe^{3+} + Cr^{3+} \quad \text{(unbalanced)}$$

As the reduction of $Cr_2O_7^{2-}$ (Cr^{6+}) to $2Cr^{3+}$ has to be coupled by oxidation of $6Fe^{2+} \rightarrow 6Fe^{3+}$, titration of $Cr_2O_7^{2-}$ requires 6 equivalents of Fe^{2+}. **[0.2 points]**

That is, at the beginning of step (B), the amount of $K_2Cr_2O_7$ was $(1.20 \times 10^{-3})/6 = 2.00 \times 10^{-4}$ mol. **[0.5 points]**

So, 6.0×10^{-5} ($= 2.60 \times 10^{-4} - 2.00 \times 10^{-4}$) mol of $K_2Cr_2O_7$ had been consumed for oxidizing pollutants. **[0.3 points]**

I-2-3. [1.0 point]

(Answer) 288

(Explanation)

6.0×10^{-5} mol of $K_2Cr_2O_7$ were required to treat 10.0 mL of waste water.

Thus, 1.00 L of waste water should require 6.0×10^{-3} mol of $K_2Cr_2O_7$. **[0.2 points]**

Equivalently this corresponds to 9.0×10^{-3} mol ($=6.0 \times 10^{-3}$ mol $\times$ 3/2) **[0.3 points]** and 0.288 g (9.0×10^{-3} mol $\times$ 32) = 288 mg of O_2 **[0.3 points]**.

Then, the COD can be expressed as 288 ppm. **[0.2 points]**

I-2-4. [2.0 points]

(Answer) 93.6, 0.176

(Explanation)

1 mole of C_6H_6 can be fully decomposed by 7.5 moles of O_2.

Or express chemical equation. $C_6H_6 + \frac{15}{2}O_2 \rightarrow 6CO_2 + 3H_2O$ **[0.3 points]**

So, 9.0×10^{-3} mol of O_2 corresponds to 9.0×10^{-3} mol/7.5 = 1.2×10^{-3} mol **[0.3 points]**

C_6H_6 : $0.0012\ \text{mol} \times \left(\frac{78\ \text{g}}{1\ \text{mol}}\right) = 0.0936\ \text{g} = 93.6\ \text{mg}$ **[0.4 points]**

1 mole of C_6H_6 is decomposed to 6 moles of CO_2. **[0.2 points]**

Therefore in the present case, 7.2×10^{-3} moles (= 1.2×10^{-3} mol × 6) of CO_2 are evolved. **[0.3 points]**

CO_2 volume is calculated as followed:

$PV = nRT$ **[0.2 points]**

$V = \frac{(7.2\times10^{-3}\ \text{mol})(0.0821\ \text{L·atm/mol·K})(298\ \text{K})}{1.00\ \text{atm}} = 0.176\ \text{L}$ **[0.3 points]**

I-2-5. [1.0 point]

(Answer) 1.2×10^{-4}, 5.2×10^{-4}

(Explanation)

Initially, there were 2.60×10^{-4} moles of $Cr_2O_7^{2-}$ but no Cr^{3+} in the test system. **[0.1 points]**

From the results of titration with Fe^{2+}, we figure that 2.00×10^{-4} moles of $Cr_2O_7^{2-}$ were present at the beginning of step (B), which means that 0.60×10^{-4} moles of $Cr_2O_7^{2-}$ were used to decompose the pollutant and to produce the 1.20×10^{-4} (=$0.60 \times 10^{-4} \times 2$) moles of Cr^{3+} before the Fe^{2+} titration. **[0.4 points]**

In the step (B), 2.00×10^{-4} moles of $Cr_2O_7^{2-}$ were used and 4.00×10^{-4} (=$2.00 \times 10^{-4} \times 2$) moles of Cr^{3+} ions produced. **[0.3 points]**

Therefore the concentration of Cr^{3+} ions after Fe^{2+} titration is 5.20×10^{-4} (=4.00×10^{-4} +1.20×10^{-4}) moles. **[0.2 points]**

	Amounts present	
	$Cr_2O_7^{2-}$	Cr^{3+}
Initial	2.60×10^{-4} mol	0
Change during step (A)	-0.60×10^{-4} mol	$+1.2 \times 10^{-4}$ mol
After step (A)/ Before step (B)	2.00×10^{-4} mol	1.2×10^{-4} mol
Change during step (B)	-2.00×10^{-4} mol	$+4.00 \times 10^{-4}$ mol
After step (B)	0	5.2×10^{-4} mol

I-3. [2.0 points]

(Answer) CH_3CHO, 18

(Explanation) Based on equation (1), oxidation of each pollutant requires following amount of O_2.

$$HCOOH + \frac{1}{2}O_2 \rightarrow CO_2 + H_2O$$

$$CH_3OH + \frac{3}{2}O_2 \rightarrow CO_2 + 2H_2O$$

$$CH_3CHO + \frac{5}{2}O_2 \rightarrow 2CO_2 + 2H_2O$$

[0.3 points, each 0.1 points]

The COD of the pollutant solutions can be calculated stepwise,

	Moles of O_2 per 1 mole pollutant	Moles of O_2 per 10.0 mg pollutant **[0.6 points] = [each 0.2 point]**	COD for 10.0 mg/L pollutant solution **[0.9 points] = [each 0.3 point]**
HCOOH (46 g/mol)	0.5	$0.5 \times (10.0 \times 10^{-3})/46$	$32 \times 10^3 \times 0.5 \times (10.0 \times 10^{-3})/46$ = 3.5 ppm
CH_3OH (32 g/mol)	1.5	$1.5 \times (10.0 \times 10^{-3})/32$	$32 \times 10^3 \times 1.5 \times (10.0 \times 10^{-3})/32$ = 15 ppm
CH_3CHO (44 g/mol)	2.5	$2.5 \times (10.0 \times 10^{-3})/44$	$32 \times 10^3 \times 2.5 \times (10.0 \times 10^{-3})/44$ = 18 ppm

Of the three samples, CH_3CHO solution has the highest COD **[0.1 points]**, which is 18 ppm. **[0.1 points]**

In any case, student who make correct answer (CH3CHO and 18 ppm), will have full credits.

II. Ski Jumping

II-1 [0.75 points] [Correct answer: 0.25, wrong answer: 0 for each force]

(Answer) Gravitational force ⑤, Normal force ②, Air resistance ⑧

II-2 [1.5 point]

(Answer) $\mu = \frac{2gh - v^2}{2g\cos\theta \cdot s}$

(Explanation) By conservation of energy [1.0] or dynamitic & kinematic [0.5 + 0.5 or proportional rating for any other method]

$$mgh - \frac{1}{2}mv^2 = \mu mg \cdot \cos\theta \cdot s$$

$\mu = \frac{gh - \frac{1}{2}v^2}{g\cos\theta \cdot s}$ [0.5]

II-3 [1.5 point]

(Answer) $t = \frac{2v_0}{g}\kappa$

(Explanation) The horizontal distance to the landing point is $N_{\text{landing}} = v_0 t$. [0.5]

The vertical distance to the landing point is $H_{\text{landing}} = \frac{1}{2}gt^2$. [0.5]

Or proportional rating for any other method

From $|\kappa| = \frac{H}{N} = \frac{H_{\text{landing}}}{N_{\text{landing}}} = \frac{\frac{1}{2}gt^2}{v_0 t}$, we can find $t = \frac{2v_0}{g}\kappa$. [possible 0.25 for using ratio in slope + 0,25 rearranging the equation]

II-4 [1.25 point]

(Answer) $D = \frac{2v_0^2}{g}\kappa\sqrt{1+\kappa^2}$ [0.25 final answer]

(Explanation) $D = \sqrt{{N_{\text{landing}}}^2 + {H_{\text{landing}}}^2} = N_{\text{landing}}\sqrt{1+\kappa^2} = \frac{2v_0^2}{g}\kappa\sqrt{1+\kappa^2}$

[0.5 + 0.5 for any method steps]

III. Thomson's Cathode-Ray Experiment

III-1 [1.0 point]

(Answer) $u = \sqrt{\frac{2eV_1}{m}}$

(Explanation) Potential energy of the electron at L_1 is eV_1 [0.25]. At the moment of electron passing through a slit of M1, kinetic energy of the electron at M_1 is $½mu^2$ [0.25], all of the potential energy converts to the kinetic energy [0.25].

$$eV_1 = \frac{1}{2}mu^2 \rightarrow u = \sqrt{\frac{2eV_1}{m}} \text{ [0.25]}$$

III-2.

III-2-1. [1.0 point] (Correct answer: 1 point, wrong answer: 0 point)

(Answer) ①

(Explanation) The electric force exerts on the electron. Because the charge of the electron is negative, the electric force exerts to the M_2 direction. So the trace of the electron is ①.

III-2-2. [1.0 point] (Correct answer: 1 point, wrong answer: 0 point)

(Answer) ③

(Explanation) The magnetic force exerts on the electron. Because the negative electron moves to the right and the magnetic field points into the page, the magnetic force exerts to the L_2 direction. So the trace of the electron is ③.

III-3 [1.5 point]

(Answer) $u = \frac{V_2}{Bd}$

(Explanation) When the electron flies straight (trace ②), the electric force directed to M_2 and the magnetic force directed to L_2 are compensated with the same magnitude ($\sum F = 0$ or $F_E = F_B$ 0.5 point). Then, $\frac{eV_2}{d} = euB$. [0.5] The speed of the electron is $= \frac{V_2}{Bd}$. [0.5]

III-4 [0.5 point]

(Answer) $\frac{e}{m} = \frac{V_2^2}{2B^2d^2V_1}$

(Explanation) $u = \sqrt{\frac{2eV_1}{m}} = \frac{V_2}{Bd} \rightarrow \frac{e}{m} = \frac{V_2^2}{2B^2d^2V_1}$ (0.25 point for $u_{III-2} = u_{III-3}$)

(0.25 point for rearranging the formula)

IV. Excretory System

(Explanation) The blood arrives through the renal artery and leaves in the renal vein. The kidneys produce urine which is carried to the bladder along the ureter. There are three major anatomical demarcations in the kidney: the cortex, the medulla, and the renal pelvis. The cortex receives most of the blood flow, and is mostly concerned with reabsorbing filtered material.

X is protein. Y is glucose. Z is urea. Water is filtered from the glomerulus to the Bowman's capsule and re-absorbed, and discharged to form urine. Urea is the substance to be filtered, so is in both the plasma and the filtrate. Glucoses and amino acids are filtered, and 100%re-absorbed. Proteins are not filtered.

IV-1.[1.0 points]

(Answer)

I-1	(**1**)

IV-2.[1.5 points]= 3 x 0.5 points

(Answer)

(X)	(Y)	(Z)
(0.0)g/100mL	(0.1)g/100mL	(0.0)g/100mL

unit (g/100mL)

constituent	Blood plasma	Primitive urine	urine
Water	92-93	92	95
Urea (Z)	0.03	0.03	2.00
Uric acid	0.004	0.004	0.05
Glucose (Y)	0.1	0.1	0
Amino acids	0.005	0.005	0
Minerals	0.9	0.9	0.9-3.6
Proteins (X)	8.0	0	0

IV-3.[1.5 points]= 3x 0.5 points

(Answer)

(X)	(Y)	(Z)
III	I, II Alternatives Only I or II: (0.25 points) Other: (0 point)	II

V. Genetics

(Answer)

V-1	V-2	V-3
6	1/8	5' -----TAAGGTCA-----3'

(Explanation)

V-1.[1.0 point]The answer is autosomal recessive. Because the individual 4 is an affected male, his genotype should be homo-recessive (aa). Thus, his offspring has to have at least one recessive allele. That is, although individuals 7 and 8 are both phenotypically normal, they have a mutant allele, respectively.

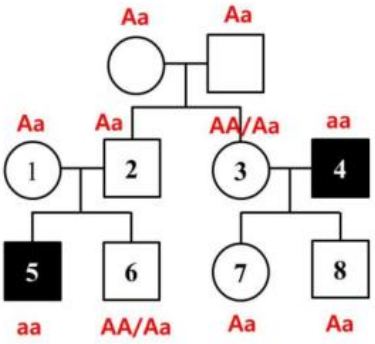

V-2. [1.0 point]Since individuals 1 and 2 already have an affected child, they must be heterozygotes. Aa x Aa →AA, Aa, Aa, aa. Therefore, the probability that anew born female will be affected is 1/8 (1/4 x 1/2).

(1 point) for the correct answer

(1 point) for zero probability, if the answer to V-1 was 2

(0 point) for other options

V-3. [1.0 point]The nucleotide 'C' in[5'----**TACGGTCA**----3'] from the wild type has been replaced to 'A'in the mutant allele, making [5'----TA**AGGTCA**----3'].

VI. Blood Circulation

VI-1.[1.0 point]= 4 x 0.25 points

(Answer)

	Semilunar valves	Atrioventricular valves
t_1	Opened (○)	Closed(×)
t_2,	Closed (×)	Opened(○)

(Explanation)Atrioventricular valves (AV valves) are thin flaps of tissue between the atria and ventricles. Semilunar valves lie at the openings from the ventricles into the arteries and prevent blood pumped out of the heart from returning to it. At t_1 of ventricle contraction, AV valves are closed while semilunar valves are opened. At t_2 of ventricle relaxation, semilunar valves are closed while AV valves are opened to fill ventricle out with blood.

VI-2.[1.0 point]

(Answer)

Heart rate	(75) beats/min

(Explanation)Heart rate is beating number of heart per unit time (min). Referring to the graph, the second heartbeat comes in 0.8 sec after the first heartbeat.

$\therefore$ Heart rate = $\frac{1\ beat}{0.8\ sec}$ X $\frac{60\ sec}{1\ \text{min}}$ = 75 beats/min

(1 points) for the correct answer
(0.5 points) for the correct calculation, if the answer is not correct

VI-3.[1.0 point]

(Answer)

Cardiac output	(5.25) L/min

(Explanation)Cardiac output is defined as the volume of blood pumped per ventricle per unit time. It can be calculated by multiplying heart rate (beats per min) by stroke volume (mL/beat)
Cardiac output = heart rate X stroke volume
Stroke volume = Volume of blood before contraction - Volume of blood after contraction
By graph, stroke volume = 135 mL – 65 mL = 70 mL
$\therefore$ Cardiac output = 75 beats/min x 70 mL/beat = 5250 mL/min (5.25 L/min)

(1 points) for the correct answer, according to the answer of the question VI.2
(0.5 points) for the correct calculation, if the answer is not correct