JEE MAIN
aglasem.com

Session 2

QUESTION PAPER

2023

JOINT ENTRANCE EXAMINATION - MAIN
PREVIOUS YEAR QUESTION PAPER

JEE MAINS Session 2_6 to 12 April 2023

Application No	
Candidate Name	
Roll No	
Test Date	
Test Time	
Subject	

Section : **Mathematics Section A**

Q.1

Let $f(x)$ be a function satisfying $f(x)+f(\pi-x)=\pi^2, \forall x \in \mathbb{R}$.

Then $\int_0^{\pi} f(x)\sin x\,dx$ is equal to

Options

1. $\frac{\pi^2}{2}$
2. $2\pi^2$
3. π^2
4. $\frac{\pi^2}{4}$

Question Type : **MCQ**
Question ID : **3666943031**
Option 1 ID : **3666949473**
Option 2 ID : **3666949471**
Option 3 ID : **3666949474**
Option 4 ID : **3666949472**
Status : **Answered**
Chosen Option : **3**

aglasem.com

Q.2 The area bounded by the curves $y=|x-1|+|x-2|$ and $y=3$ is equal to

Options
1. 4
2. 5
3. 6
4. 3

Question Type : **MCQ**
Question ID : **3666943034**
Option 1 ID : **3666949484**
Option 2 ID : **3666949485**
Option 3 ID : **3666949486**
Option 4 ID : **3666949483**
Status : **Marked For Review**
Chosen Option : **4**

Q.3 Let P be a square matrix such that $P^2=I-P$. For $\alpha,\beta,\gamma,\delta\in\mathbb{N}$, if $P^\alpha+P^\beta=\gamma I-29P$ and $P^\alpha-P^\beta=\delta I-13P$, then $\alpha+\beta+\gamma-\delta$ is equal to

Options
1. 22
2. 18
3. 24
4. 40

Question Type : **MCQ**
Question ID : **3666943024**
Option 1 ID : **3666949445**
Option 2 ID : **3666949446**
Option 3 ID : **3666949444**
Option 4 ID : **3666949443**
Status : **Not Answered**
Chosen Option : **--**

aglasem.com

Q.4 Let $a \neq b$ be two non-zero real numbers. Then the number of elements in the set $X = \{z \in \mathbb{C} : \mathrm{Re}(az^2 + bz) = a \text{ and } \mathrm{Re}(bz^2 + az) = b\}$ is equal to

Options
1. 2
2. 0
3. 1
4. 3

Question Type : **MCQ**
Question ID : **3666943023**
Option 1 ID : **3666949441**
Option 2 ID : **3666949439**
Option 3 ID : **3666949440**
Option 4 ID : **3666949442**
Status : **Not Answered**
Chosen Option : **--**

Q.5 All the letters of the word PUBLIC are written in all possible orders and these words are written as in a dictionary with serial numbers. Then the serial number of the word PUBLIC is

Options
1. 576
2. 578
3. 580
4. 582

Question Type : **MCQ**
Question ID : **3666943028**
Option 1 ID : **3666949459**
Option 2 ID : **3666949460**
Option 3 ID : **3666949461**
Option 4 ID : **3666949462**
Status : **Answered**
Chosen Option : **3**

aglasem.com

Q.6

If gcd (m, n) = 1 and

$1^2-2^2+3^2-4^2+.....+(2021)^2-(2022)^2+(2023)^2=1012\ m^2n$

then m^2-n^2 is equal to

Options

1. 220
2. 180
3. 200
4. 240

Question Type : **MCQ**
Question ID : **3666943030**
Option 1 ID : **3666949468**
Option 2 ID : **3666949470**
Option 3 ID : **3666949469**
Option 4 ID : **3666949467**
Status : **Not Answered**
Chosen Option : **--**

Q.7

The sum of all values of α, for which the points whose position vectors are $\hat{i}-2\hat{j}+3\hat{k}$, $2\hat{i}-3\hat{j}+4\hat{k}$, $(\alpha+1)\hat{i}+2\hat{k}$ and $9\hat{i}+(\alpha-8)\hat{j}+6\hat{k}$ are coplanar, is equal to

Options

1. 4
2. –2
3. 6
4. 2

Question Type : **MCQ**
Question ID : **3666943037**
Option 1 ID : **3666949497**
Option 2 ID : **3666949495**
Option 3 ID : **3666949498**
Option 4 ID : **3666949496**
Status : **Answered**
Chosen Option : **4**

aglasem.com

Q.8 A plane P contains the line of intersection of the plane $\vec{r}\cdot\left(\hat{i}+\hat{j}+\hat{k}\right)=6$ and $\vec{r}\cdot\left(2\hat{i}+3\hat{j}+4\hat{k}\right)=-5$. If P passes through the point (0, 2, –2), then the square of distance of the point (12, 12, 18) from the plane P is

Options
1. 620
2. 310
3. 155
4. 1240

Question Type : **MCQ**
Question ID : **3666943035**
Option 1 ID : **3666949489**
Option 2 ID : **3666949488**
Option 3 ID : **3666949487**
Option 4 ID : **3666949490**
Status : **Not Answered**
Chosen Option : **--**

Q.9 Let the vectors $\vec{a},\vec{b},\vec{c}$ represent three coterminous edges of a parallelopiped of volume V. Then the volume of the parallelopiped, whose coterminous edges are represented by $\vec{a},\vec{b}+\vec{c}$ and $\vec{a}+2\vec{b}+3\vec{c}$ is equal to:

Options
1. 2 V
2. V
3. 3 V
4. 6 V

Question Type : **MCQ**
Question ID : **3666943038**
Option 1 ID : **3666949500**
Option 2 ID : **3666949499**
Option 3 ID : **3666949501**
Option 4 ID : **3666949502**
Status : **Answered**
Chosen Option : **3**

aglasem.com

Q.10 Let the sets A and B denote the domain and range respectively of the function $f(x)=\frac{1}{\sqrt{\lceil x \rceil - x}}$, where $\lceil x \rceil$ denotes the smallest integer greater than or equal to x. Then among the statements

(S1) : $A \cap B = (1, \infty) - \mathbb{N}$ and

(S2) : $A \cup B = (1, \infty)$

Options

1. neither (S1) nor (S2) is true
2. only (S1) is true
3. both (S1) and (S2) are true
4. only (S2) is true

Question Type : **MCQ**
Question ID : **3666943021**
Option 1 ID : **3666949434**
Option 2 ID : **3666949431**
Option 3 ID : **3666949433**
Option 4 ID : **3666949432**
Status : **Marked For Review**
Chosen Option : **4**

Q.11 $\lim\limits_{n\to\infty}\left\{\left(2^{\frac{1}{2}}-2^{\frac{1}{3}}\right)\left(2^{\frac{1}{2}}-2^{\frac{1}{5}}\right).....\left(2^{\frac{1}{2}}-2^{\frac{1}{2n+1}}\right)\right\}$ is equal to

Options

1. $\sqrt{2}$
2. 1
3. 0
4. $\frac{1}{\sqrt{2}}$

Question Type : **MCQ**
Question ID : **3666943029**
Option 1 ID : **3666949466**
Option 2 ID : **3666949463**
Option 3 ID : **3666949464**
Option 4 ID : **3666949465**
Status : **Not Answered**
Chosen Option : **--**

aglasem.com

Q.12

Among the statements:

(S1) : $2023^{2022}-1999^{2022}$ is divisible by 8

(S2) : $13(13)^n-11n-13$ is divisible by 144 for infinitely many $n \in \mathbb{N}$

Options

1. only (S2) is correct
2. both (S1) and (S2) are incorrect
3. both (S1) and (S2) are correct
4. only (S1) is correct

Question Type : **MCQ**
Question ID : **3666943026**
Option 1 ID : **3666949452**
Option 2 ID : **3666949453**
Option 3 ID : **3666949454**
Option 4 ID : **3666949451**
Status : **Answered**
Chosen Option : **4**

Q.13

If the solution curve $f(x, y)=0$ of the differential equation $(1+\log_e x)\frac{dx}{dy}-x\log_e x=e^y,\ x>0,$ passes through the points $(1, 0)$ and $(\alpha, 2)$, then α^α is equal to

Options

1. e^{2e^2}
2. $e^{\sqrt{2}e^2}$
3. e^{e^2}
4. $e^{2e^{\sqrt{2}}}$

Question Type : **MCQ**
Question ID : **3666943032**
Option 1 ID : **3666949478**
Option 2 ID : **3666949476**
Option 3 ID : **3666949475**
Option 4 ID : **3666949477**
Status : **Not Answered**
Chosen Option : **--**

aglasem.com

Q.14

If the tangents at the points P and Q on the circle $x^2+y^2-2x+y=5$ meet at the point $R\left(\frac{9}{4}, 2\right)$, then the area of the triangle PQR is:

Options

1. $\frac{13}{4}$
2. $\frac{13}{8}$
3. $\frac{5}{8}$
4. $\frac{5}{4}$

Question Type : **MCQ**
Question ID : **3666943033**
Option 1 ID : **3666949480**
Option 2 ID : **3666949479**
Option 3 ID : **3666949481**
Option 4 ID : **3666949482**
Status : **Not Answered**
Chosen Option : **--**

Q.15

For the system of equations

$x+y+z=6$

$x+2y+\alpha z=10$

$x+3y+5z=\beta$, which one of the following is NOT true?

Options

1. System has no solution for $\alpha=3, \beta=24$.
2. System has a unique solution for $\alpha=3, \beta\neq 14$.
3. System has a unique solution for $\alpha=-3, \beta=14$.
4. System has infinitely many solutions for $\alpha=3, \beta=14$.

Question Type : **MCQ**
Question ID : **3666943025**
Option 1 ID : **3666949448**
Option 2 ID : **3666949450**
Option 3 ID : **3666949447**
Option 4 ID : **3666949449**
Status : **Answered**
Chosen Option : **3**

aglasem.com

Q.16

In a group of 100 persons 75 speak English and 40 speak Hindi. Each person speaks at least one of the two languages. If the number of persons, who speak only English is α and the number of persons who speak only Hindi is β, then the eccentricity of the ellipse $25\left(\beta^2x^2+\alpha^2y^2\right)=\alpha^2\beta^2$ is

Options

1. $\frac{3\sqrt{15}}{12}$
2. $\frac{\sqrt{129}}{12}$
3. $\frac{\sqrt{117}}{12}$
4. $\frac{\sqrt{119}}{12}$

Question Type : **MCQ**
Question ID : **3666943022**
Option 1 ID : **3666949438**
Option 2 ID : **3666949437**
Option 3 ID : **3666949435**
Option 4 ID : **3666949436**
Status : **Not Answered**
Chosen Option : **--**

Q.17

Among the statements

(S1): $(p\Rightarrow q)\vee\left((\sim p)\wedge q\right)$ is a tautology

(S2): $(q\Rightarrow p)\Rightarrow\left((\sim p)\wedge q\right)$ is a contradiction

Options

1. both (S1) and (S2) are True
2. neither (S1) and (S2) is True
3. only (S2) is True
4. only (S1) is True

Question Type : **MCQ**
Question ID : **3666943040**
Option 1 ID : **3666949509**
Option 2 ID : **3666949510**
Option 3 ID : **3666949508**
Option 4 ID : **3666949507**
Status : **Answered**
Chosen Option : **2**

Q.18

If the coefficients of x^7 in $\left(ax^2+\frac{1}{2bx}\right)^{11}$ and x^{-7} in $\left(ax-\frac{1}{3bx^2}\right)^{11}$ are equal, then

Options

1. $729ab=32$
2. $64ab=243$
3. $32ab=729$
4. $243ab=64$

Question Type : **MCQ**
Question ID : **3666943027**
Option 1 ID : **3666949458**
Option 2 ID : **3666949456**
Option 3 ID : **3666949455**
Option 4 ID : **3666949457**
Status : **Answered**
Chosen Option : **1**

Q.19

Let the line L pass through the point (0, 1, 2), intersect the line $\frac{x-1}{2}=\frac{y-2}{3}=\frac{z-3}{4}$ and be parallel to the plane $2x+y-3z=4$. Then the distance of the point P(1, –9, 2) from the line L is

Options

1. $\sqrt{69}$
2. $\sqrt{74}$
3. $\sqrt{54}$
4. 9

Question Type : **MCQ**
Question ID : **3666943036**
Option 1 ID : **3666949492**
Option 2 ID : **3666949493**
Option 3 ID : **3666949491**
Option 4 ID : **3666949494**
Status : **Not Answered**
Chosen Option : **--**

aglasem.com

Q.20

Three dice are rolled. If the probability of getting different numbers on the three dice is $\frac{p}{q}$, where p and q are co-prime, then $q-p$ is equal to

Options

1. 3
2. 1
3. 4
4. 2

Question Type : **MCQ**
Question ID : **3666943039**
Option 1 ID : **3666949504**
Option 2 ID : **3666949506**
Option 3 ID : **3666949503**
Option 4 ID : **3666949505**
Status : **Answered**
Chosen Option : **3**

Section : **Mathematics Section B**

Q.21

If $(20)^{19}+2(21)(20)^{18}+3(21)^2(20)^{17}+\ldots+20(21)^{19}=k(20)^{19}$, then k is equal to _____.

Given Answer : **400**

Question Type : **SA**
Question ID : **3666943043**
Status : **Answered**

Q.22

The value of $\tan 9^\circ-\tan 27^\circ-\tan 63^\circ+\tan 81^\circ$ is _____.

Given Answer : **0**

Question Type : **SA**
Question ID : **3666943050**
Status : **Answered**

Q.23

The number of 4-letter words, with or without meaning, each consisting of 2 vowels and 2 consonants, which can be formed from the letters of the word UNIVERSE without repetition is _____.

Given Answer : **--**

Question Type : **SA**
Question ID : **3666943042**
Status : **Not Answered**

aglasem.com

Q.24

Let $f(x)=\dfrac{x}{\left(1+x^n\right)^{\frac{1}{n}}}$, $x \in \mathbb{R}-\{-1\}$, $n \in \mathbb{N}$, $n>2$.

If $f^n(x)=(fofof\ldots..\text{ upto } n \text{ times})\,(x)$, then $\lim\limits_{n\to\infty}\int\limits_0^1 x^{n-2}\left(f^n(x)\right)dx$ is equal to _____.

Given --
Answer :

Question Type : **SA**
Question ID : **3666943046**
Status : **Not Answered**

Q.25

Let the eccentricity of an ellipse $\dfrac{x^2}{a^2}+\dfrac{y^2}{b^2}=1$ is reciprocal to that of the hyperbola $2x^2-2y^2=1$. If the ellipse intersects the hyperbola at right angles, then square of length of the latus-rectum of the ellipse is _____.

Given --
Answer :

Question Type : **SA**
Question ID : **3666943047**
Status : **Not Answered**

Q.26

If the mean and variance of the frequency distribution

x_i	2	4	6	8	10	12	14	16
f_i	4	4	α	15	8	β	4	5

are 9 and 15.08 respectively, then the value of $\alpha^2+\beta^2-\alpha\beta$ is _____.

Given --
Answer :

Question Type : **SA**
Question ID : **3666943049**
Status : **Not Answered**

Q.27

If the lines $\dfrac{x-1}{2}=\dfrac{2-y}{-3}=\dfrac{z-3}{\alpha}$ and $\dfrac{x-4}{5}=\dfrac{y-1}{2}=\dfrac{z}{\beta}$ intersect, then the magnitude of the minimum value of $8\alpha\beta$ is _____.

Given **32**
Answer :

Question Type : **SA**
Question ID : **3666943048**
Status : **Answered**

Q.28

For $\alpha, \beta, z \in \mathbb{C}$ and $\lambda > 1$, if $\sqrt{\lambda - 1}$ is the radius of the circle $|z-\alpha|^2 + |z-\beta|^2 = 2\lambda$, then $|\alpha - \beta|$ is equal to _____.

Given --
Answer :

Question Type : **SA**
Question ID : **3666943041**
Status : **Not Answered**

Q.29

Let a curve $y = f(x), x \in (0, \infty)$ pass through the points $P\left(1, \frac{3}{2}\right)$ and $Q\left(a, \frac{1}{2}\right)$. If the tangent at any point $R(b, f(b))$ to the given curve cuts the y-axis at the point $S(0, c)$ such that $bc = 3$, then $(PQ)^2$ is equal to _____.

Given --
Answer :

Question Type : **SA**
Question ID : **3666943045**
Status : **Not Answered**

Q.30

The number of points, where the curve $y = x^5 - 20x^3 + 50x + 2$ crosses the x-axis, is _____.

Given **4**
Answer :

Question Type : **SA**
Question ID : **3666943044**
Status : **Answered**

Section : **Physics Section A**

Q.31

A capacitor of capacitance 150.0 μF is connected to an alternating source of emf given by E = 36 sin(120πt) V. The maximum value of current in the circuit is approximately equal to :

Options

1. $\frac{1}{\sqrt{2}} A$
2. $\sqrt{2} A$
3. $2A$
4. $2\sqrt{2} A$

Question Type : **MCQ**
Question ID : **3666943067**
Option 1 ID : **3666949587**
Option 2 ID : **3666949585**
Option 3 ID : **3666949588**
Option 4 ID : **3666949586**
Status : **Answered**
Chosen Option : **4**

aglasem.com

Q.32 Choose the incorrect statement from the following:

Options

1. When a body falls towards earth, the displacement of earth towards the body is negligible.

2. For a planet revolving around the sun in an elliptical orbit, the total energy of the planet remains constant.

3. The speed of satellite in a given circular orbit remains constant.

4. The linear speed of a planet revolving around the sun remains constant.

Question Type : **MCQ**
Question ID : **3666943055**
Option 1 ID : **3666949537**
Option 2 ID : **3666949539**
Option 3 ID : **3666949538**
Option 4 ID : **3666949540**
Status : **Answered**
Chosen Option : **4**

Q.33 A particle starts with an initial velocity of 10.0 ms^{-1} along x-direction and accelerates uniformly at the rate of 2.0 ms^{-2}. The time taken by the particle to reach the velocity of 60.0 ms^{-1} is _____.

Options

1. 30s

2. 6s

3. 25s

4. 3s

Question Type : **MCQ**
Question ID : **3666943053**
Option 1 ID : **3666949531**
Option 2 ID : **3666949529**
Option 3 ID : **3666949530**
Option 4 ID : **3666949532**
Status : **Answered**
Chosen Option : **3**

Q.34 As shown in the figure, a particle is moving with constant speed π m/s. Considering its motion from A to B, the magnitude of the average velocity is:

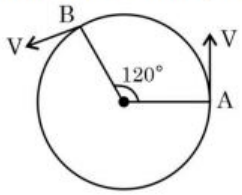

Options

1. $1.5\sqrt{3}$ m/s
2. π m/s
3. $2\sqrt{3}$ m/s
4. $\sqrt{3}$ m/s

Question Type : **MCQ**
Question ID : **3666943052**
Option 1 ID : **3666949527**
Option 2 ID : **3666949525**
Option 3 ID : **3666949528**
Option 4 ID : **3666949526**
Status : **Not Answered**
Chosen Option : **--**

Q.35 The energy density associated with electric field $\vec{E}$ and magnetic field $\vec{B}$ of an electromagnetic wave in free space is given by (ϵ_0 – permittivity of free space, μ_0 – permeability of free space)

Options

1. $U_E = \frac{\epsilon_0 E^2}{2}, U_B = \frac{B^2}{2\mu_0}$
2. $U_E = \frac{E^2}{2\epsilon_0}, U_B = \frac{\mu_0 B^2}{2}$
3. $U_E = \frac{\epsilon_0 E^2}{2}, U_B = \frac{\mu_0 B^2}{2}$
4. $U_E = \frac{E^2}{2\epsilon_0}, U_B = \frac{B^2}{2\mu_0}$

Question Type : **MCQ**
Question ID : **3666943066**
Option 1 ID : **3666949584**
Option 2 ID : **3666949581**
Option 3 ID : **3666949582**
Option 4 ID : **3666949583**
Status : **Answered**
Chosen Option : **1**

Q.36 Given below are two statements: one is labelled as **Assertion A** and the other is labelled as **Reason R**

Assertion A: Diffusion current in a p-n junction is greater than the drift current in magnitude if the junction is forward biased.

Reason R: Diffusion current in a p-n junction is from the n-side to the p-side if the junction is forward biased.

In the light of the above statements, choose the **most appropriate** answer from the options given below

Options 1.

Both **A** and **R** are correct but **R** is **NOT** the correct explanation of **A**

2.

Both **A** and **R** are correct and **R** is the correct explanation of **A**

3. **A** is correct but **R** is not correct

4. **A** is not correct but **R** is correct

Question Type : **MCQ**
Question ID : **3666943062**
Option 1 ID : **3666949566**
Option 2 ID : **3666949565**
Option 3 ID : **3666949567**
Option 4 ID : **3666949568**
Status : **Not Answered**
Chosen Option : **--**

Q.37 A body cools in 7 minutes from 60°C to 40°C. The temperature of the surrounding is 10°C. The temperature of the body after the next 7 minutes will be:

Options 1. 30°C

2. 32°C

3. 34°C

4. 28°C

Question Type : **MCQ**
Question ID : **3666943058**
Option 1 ID : **3666949550**
Option 2 ID : **3666949551**
Option 3 ID : **3666949552**
Option 4 ID : **3666949549**
Status : **Not Answered**
Chosen Option : **--**

aglasem.com

Q.38 The weight of a body on the surface of the earth is 100 N. The gravitational force on it when taken at a height, from the surface of earth, equal to one-fourth the radius of the earth is:

Options
1. 50 N
2. 100 N
3. 25 N
4. 64 N

Question Type : **MCQ**
Question ID : **3666943056**
Option 1 ID : **3666949542**
Option 2 ID : **3666949544**
Option 3 ID : **3666949541**
Option 4 ID : **3666949543**
Status : **Answered**
Chosen Option : **4**

Q.39 Figure shows a part of an electric circuit. The potentials at points a, b and c are 30 V, 12 V and 2 V respectively. The current through the 20 Ω resistor will be,

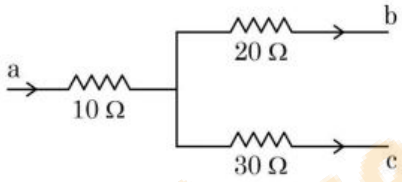

Options
1. 0.4 A
2. 0.6 A
3. 1.0 A
4. 0.2 A

Question Type : **MCQ**
Question ID : **3666943069**
Option 1 ID : **3666949595**
Option 2 ID : **3666949594**
Option 3 ID : **3666949596**
Option 4 ID : **3666949593**
Status : **Answered**
Chosen Option : **2**

aglasem.com

Q.40 A 2 meter long scale with least count of 0.2 cm is used to measure the locations of objects on an optical bench. While measuring the focal length of a convex lens, the object pin and the convex lens are placed at 80 cm mark and 1m mark, respectively. The image of the object pin on the other side of lens coincides with image pin that is kept at 180 cm mark. The % error in the estimation of focal length is:

Options
1. 1.02
2. 0.51
3. 0.85
4. 1.70

Question Type : **MCQ**
Question ID : **3666943051**
Option 1 ID : **3666949523**
Option 2 ID : **3666949521**
Option 3 ID : **3666949522**
Option 4 ID : **3666949524**
Status : **Not Answered**
Chosen Option : **--**

Q.41 A dipole comprises of two charged particles of identical magnitude q and opposite in nature. The mass 'm' of the positive charged particle is half of the mass of the negative charged particle. The two charges are separated by a distance 'l'. If the dipole is placed in a uniform electric field '$\bar{E}$'; in such a way that dipole axis makes a very small angle with the electric field, '$\bar{E}$'. The angular frequency of the oscillations of the dipole when released is given by:

Options
1. $\sqrt{\frac{8qE}{3ml}}$
2. $\sqrt{\frac{8qE}{ml}}$
3. $\sqrt{\frac{4qE}{ml}}$
4. $\sqrt{\frac{4qE}{3ml}}$

Question Type : **MCQ**
Question ID : **3666943070**
Option 1 ID : **3666949598**
Option 2 ID : **3666949600**
Option 3 ID : **3666949599**
Option 4 ID : **3666949597**
Status : **Answered**
Chosen Option : **3**

Q.42 A student is provided with a variable voltage source V, a test resistor $R_T = 10\Omega$, two identical galvanometers G_1 and G_2 and two additional resistors, $R_1 = 10M\Omega$ and $R_2 = 0.001\Omega$. For conducting an experiment to verify ohm's law, the most suitable circuit is:

Options

1. 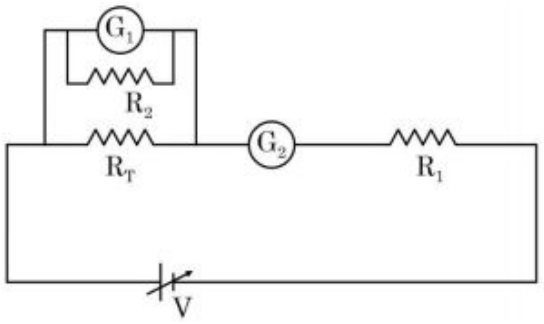

2. 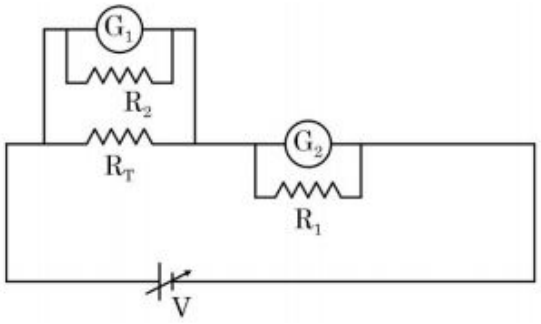

3. 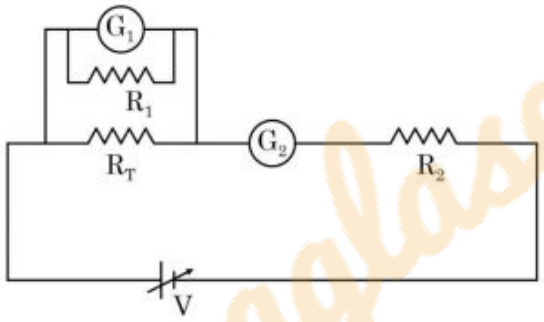

4. 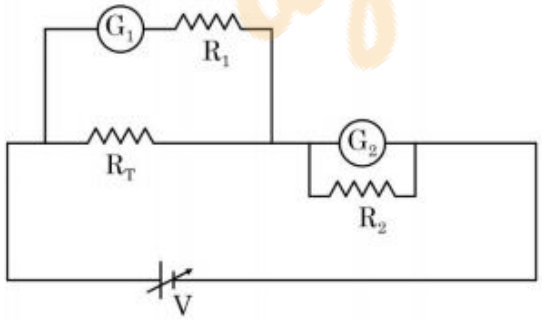

Question Type : **MCQ**
Question ID : **3666943068**
Option 1 ID : **3666949589**
Option 2 ID : **3666949591**
Option 3 ID : **3666949590**
Option 4 ID : **3666949592**
Status : **Answered**
Chosen Option : **2**

aglasem.com

Q.43 The ratio of speed of sound in hydrogen gas to the speed of sound in oxygen gas at the same temperature is:

Options
1. $4:1$
2. $1:2$
3. $1:4$
4. $1:1$

Question Type : **MCQ**
Question ID : **3666943060**
Option 1 ID : **3666949560**
Option 2 ID : **3666949558**
Option 3 ID : **3666949559**
Option 4 ID : **3666949557**
Status : **Answered**
Chosen Option : **1**

Q.44 For an amplitude modulated wave the minimum amplitude is 3 V, while the modulation index is 60%. The maximum amplitude of the modulated wave is:

Options
1. 15 V
2. 10 V
3. 12 V
4. 5 V

Question Type : **MCQ**
Question ID : **3666943061**
Option 1 ID : **3666949564**
Option 2 ID : **3666949562**
Option 3 ID : **3666949563**
Option 4 ID : **3666949561**
Status : **Answered**
Chosen Option : **3**

aglasem.com

Q.45 The temperature of an ideal gas is increased from 200 K to 800 K. If r.m.s. speed of gas at 200 K is v_0. Then, r.m.s. speed of the gas at 800 K will be:

Options
1. v_0
2. $4v_0$
3. $2v_0$
4. $\frac{v_0}{4}$

Question Type : **MCQ**
Question ID : **3666943059**
Option 1 ID : **3666949555**
Option 2 ID : **3666949556**
Option 3 ID : **3666949554**
Option 4 ID : **3666949553**
Status : **Answered**
Chosen Option : **3**

Q.46 Given below are two statements: one is labelled as **Assertion A** and the other is labelled as **Reason R**

Assertion A: When you squeeze one end of a tube to get toothpaste out from the other end, Pascal's principle is observed.

Reason R: A change in the pressure applied to an enclosed incompressible fluid is transmitted undiminished to every portion of the fluid and to the walls of its container.

In the light of the above statements, choose the **most appropriate** answer from the options given below

Options
1. Both **A** and **R** are correct but **R** is **NOT** the correct explanation of **A**
2. Both **A** and **R** are correct and **R** is the correct explanation of **A**
3. **A** is not correct but **R** is correct
4. **A** is correct but **R** is not correct

Question Type : **MCQ**
Question ID : **3666943057**
Option 1 ID : **3666949546**
Option 2 ID : **3666949545**
Option 3 ID : **3666949548**
Option 4 ID : **3666949547**
Status : **Not Answered**
Chosen Option : **--**

Q.47 Given below are two statements: one is labelled as **Assertion A** and the other is labelled as **Reason R**

Assertion A: The phase difference of two light waves change if they travel through different media having same thickness, but different indices of refraction.

Reason R: The wavelengths of waves are different in different media.

In the light of the above statements, choose the **most appropriate** answer from the options given below

Options
1. **A** is correct but **R** is not correct
2. Both **A** and **R** are correct but **R** is **NOT** the correct explanation of **A**
3. Both **A** and **R** are correct and **R** is the correct explanation of **A**
4. **A** is not correct but **R** is correct

Question Type : **MCQ**
Question ID : **3666943065**
Option 1 ID : **3666949579**
Option 2 ID : **3666949578**
Option 3 ID : **3666949577**
Option 4 ID : **3666949580**
Status : **Answered**
Chosen Option : **3**

Q.48 A small particle of mass m moves in such a way that its potential energy $U=\frac{1}{2}m\,\omega^2 r^2$ where ω is constant and r is the distance of the particle from origin. Assuming Bohr's quantization of momentum and circular orbit, the radius of nth orbit will be proportional to,

Options
1. n
2. $\sqrt{n}$
3. n^2
4. $\frac{1}{n}$

Question Type : **MCQ**
Question ID : **3666943063**
Option 1 ID : **3666949569**
Option 2 ID : **3666949571**
Option 3 ID : **3666949570**
Option 4 ID : **3666949572**
Status : **Answered**
Chosen Option : **3**

Q.49 A child of mass 5 kg is going round a merry-go-round that makes 1 rotation in 3.14 s. The radius of the merry-go-round is 2 m. The centrifugal force on the child will be

Options
1. 50 N
2. 80 N
3. 40 N
4. 100 N

Question Type : **MCQ**
Question ID : **3666943054**
Option 1 ID : **3666949534**
Option 2 ID : **3666949535**
Option 3 ID : **3666949533**
Option 4 ID : **3666949536**
Status : **Answered**
Chosen Option : **3**

Q.50 The work functions of Aluminium and Gold are 4.1 eV and and 5.1 eV respectively. The ratio of the slope of the stopping potential versus frequency plot for Gold to that of Aluminium is

Options
1. 1.5
2. 1
3. 1.24
4. 2

Question Type : **MCQ**
Question ID : **3666943064**
Option 1 ID : **3666949575**
Option 2 ID : **3666949574**
Option 3 ID : **3666949573**
Option 4 ID : **3666949576**
Status : **Answered**
Chosen Option : **2**

aglasem.com

Section : **Physics Section B**

Q.51 A ring and a solid sphere rotating about an axis passing through their centers have same radii of gyration. The axis of rotation is perpendicular to plane of ring. The ratio of radius of ring to that of sphere is $\sqrt{\frac{2}{x}}$. The value of x is _____.

Given Answer : **3**

Question Type : **SA**
Question ID : **3666943072**
Status : **Answered**

Q.52

A metal block of mass m is suspended from a rigid support through a metal wire of diameter 14 mm. The tensile stress developed in the wire under equilibrium state is 7×10^5 Nm^{-2}. The value of mass m is _____ kg. (Take, g = 9.8 ms^{-2} and $\pi=\frac{22}{7}$)

Given **44**
Answer :

Question Type : **SA**
Question ID : **3666943073**
Status : **Answered**

Q.53

A simple pendulum with length 100 cm and bob of mass 250 g is executing S.H.M. of amplitude 10 cm. The maximum tension in the string is found to be $\frac{x}{40}$ N. The value of x is _____.

Given **--**
Answer :

Question Type : **SA**
Question ID : **3666943080**
Status : **Not Answered**

Q.54

A beam of light consisting of two wavelengths 7000 Å and 5500 Å is used to obtain interference pattern in Young's double slit experiment. The distance between the slits is 2.5 mm and the distance between the plane of slits and the screen is 150 cm. The least distance from the central fringe, where the bright fringes due to both the wavelengths coincide, is $n\times10^{-5}$m. The value of n is _____.

Given **462**
Answer :

Question Type : **SA**
Question ID : **3666943075**
Status : **Answered**

Q.55

A proton with a kinetic energy of 2.0 eV moves into a region of uniform magnetic field of magnitude $\frac{\pi}{2}\times10^{-3}$ T. The angle between the direction of magnetic field and velocity of proton is 60°. The pitch of the helical path taken by the proton is _____ cm. (Take, mass of proton = 1.6×10^{-27} kg and Charge on proton = 1.6×10^{-19} C).

Given **--**
Answer :

Question Type : **SA**
Question ID : **3666943077**
Status : **Not Answered**

Q.56

Two concentric circular coils with radii 1 cm and 1000 cm, and number of turns 10 and 200 respectively are placed coaxially with centers coinciding. The mutual inductance of this arrangement will be _____ $\times 10^{-8}$ H. (Take, $\pi^2 = 10$)

Given **4**
Answer :

Question Type : **SA**
Question ID : **3666943074**
Status : **Marked For Review**

Q.57

A body is dropped on ground from a height 'h_1' and after hitting the ground, it rebounds to a height 'h_2'. If the ratio of velocities of the body just before and after hitting ground is 4, then percentage loss in kinetic energy of the body is $\frac{x}{4}$. The value of x is _____.

Given --
Answer :

Question Type : **SA**
Question ID : **3666943071**
Status : **Not Answered**

Q.58

Experimentally it is found that 12.8 eV energy is required to separate a hydrogen atom into a proton and an electron. So the orbital radius of the electron in a hydrogen atom is $\frac{9}{x} \times 10^{-10}$ m. The value of the x is : _____.

(1 eV = 1.6×10^{-19} J, $\frac{1}{4\pi\epsilon_0} = 9 \times 10^9$ Nm^2/C^2 and electronic charge $= 1.6 \times 10^{-19}$ C)

Given --
Answer :

Question Type : **SA**
Question ID : **3666943076**
Status : **Not Answered**

Q.59

As shown in the figure, two parallel plate capacitors having equal plate area of 200 cm^2 are joined in such a way that $a \neq b$. The equivalent capacitance of the combination is $x \epsilon_0$ F. The value of x is _____.

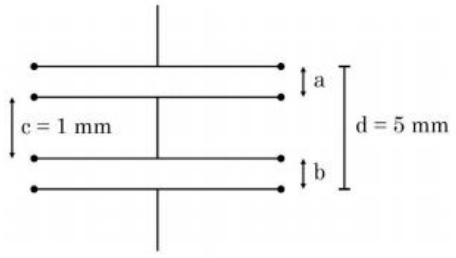

Given --
Answer :

Question Type : **SA**
Question ID : **3666943079**
Status : **Not Answered**

Q.60

As shown in the figure, the voltmeter reads 2 V across 5 Ω resistor. The resistance of the voltmeter is _____ Ω.

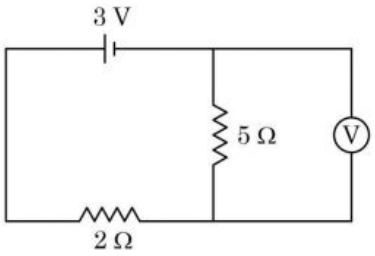

Given 11
Answer :

Question Type : **SA**
Question ID : **3666943078**
Status : **Answered**

Section : **Chemistry Section A**

Q.61

Element not present in Nessler's reagent is

Options

1. N
2. K
3. I
4. Hg

Question Type : **MCQ**
Question ID : **3666943094**
Option 1 ID : **3666949665**
Option 2 ID : **3666949663**
Option 3 ID : **3666949666**
Option 4 ID : **3666949664**
Status : **Not Answered**
Chosen Option : **--**

aglasem.com

Q.62

From the figure of column chromatography given below, identify incorrect statements.

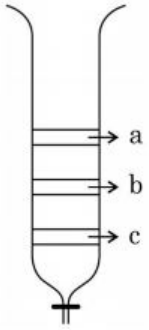

A. Compound 'c' is more polar than 'a' and 'b'
B. Compound 'a' is least polar
C. Compound 'b' comes out of the column before 'c' and after 'a'
D. Compound 'a' spends more time in the column

Choose the correct answer from the options given below:

Options

1. A, B and D only

2. A, B and C only

3. B, C and D only

4. B and D only

aglasem.com

Question Type : **MCQ**
Question ID : **3666943096**
Option 1 ID : **3666949674**
Option 2 ID : **3666949672**
Option 3 ID : **3666949671**
Option 4 ID : **3666949673**
Status : **Answered**
Chosen Option : **1**

Q.63 Consider the following reaction that goes from A to B in three steps as shown below:

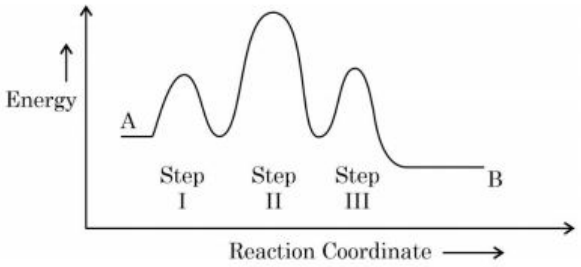

Choose the correct option

	Number of intermediates	Number of Activated complexes	Rate determining step
Options 1.	2	3	III
2.	2	3	I
3.	3	2	II
4.	2	3	II

Question Type : **MCQ**
Question ID : **3666943083**
Option 1 ID : **3666949620**
Option 2 ID : **3666949622**
Option 3 ID : **3666949621**
Option 4 ID : **3666949619**
Status : **Answered**
Chosen Option : **3**

Q.64 The group of chemicals used as pesticide is

Options
1. DDT, Aldrin
2. Aldrin, Sodium chlorate, Sodium arsinite
3. Dieldrin, Sodium arsinite, Tetrachloroethene
4. Sodium chlorate, DDT, PAN

Question Type : **MCQ**
Question ID : **3666943091**
Option 1 ID : **3666949653**
Option 2 ID : **3666949654**
Option 3 ID : **3666949651**
Option 4 ID : **3666949652**
Status : **Answered**
Chosen Option : **4**

aglasem.com

Q.65 Given below are two statements:

Statement I: Morphine is a narcotic analgesic. It helps in relieving pain without producing sleep.

Statement II: Morphine and its derivatives are obtained from opium poppy.

In the light of the above statements, choose the **correct** answer from the options given below

Options

1. Both Statement I and Statement II are true
2. Statement I is true but Statement II is false
3. Statement I is false but Statement II is true
4. Both Statement I and Statement II are false

Question Type : **MCQ**
Question ID : **3666943100**
Option 1 ID : **3666949687**
Option 2 ID : **3666949689**
Option 3 ID : **3666949690**
Option 4 ID : **3666949688**
Status : **Answered**
Chosen Option : **1**

aglasem.com

Q.66 Find out the major product from the following reaction.

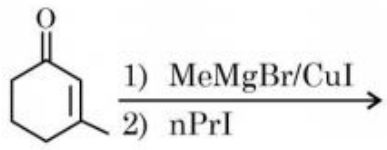

Options

1. 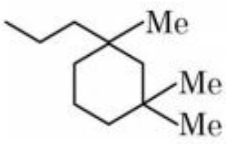

2. 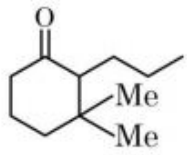

3. 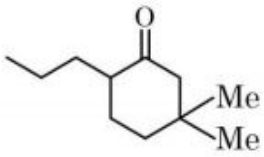

4. 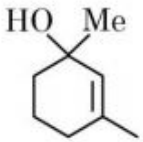

aglasem.com

Question Type : **MCQ**
Question ID : **3666943097**
Option 1 ID : **3666949678**
Option 2 ID : **3666949677**
Option 3 ID : **3666949676**
Option 4 ID : **3666949675**
Status : **Not Answered**
Chosen Option : **--**

Q.67 The IUPAC name of $K_3[Co(C_2O_4)_3]$ is:-

Options
1. Potassium trioxalatocobalt(III)
2. Potassium trioxalatocobaltate(III)
3. Potassium tris(oxalato)cobalt(III)
4. Potassium tris(oxalato)cobaltate(III)

Question Type : **MCQ**
Question ID : **3666943092**
Option 1 ID : **3666949657**
Option 2 ID : **3666949658**
Option 3 ID : **3666949655**
Option 4 ID : **3666949656**
Status : **Answered**
Chosen Option : **1**

Q.68 The product, which is not obtained during the electrolysis of brine solution is

Options
1. HCl
2. H_2
3. NaOH
4. Cl_2

Question Type : **MCQ**
Question ID : **3666943085**
Option 1 ID : **3666949629**
Option 2 ID : **3666949628**
Option 3 ID : **3666949630**
Option 4 ID : **3666949627**
Status : **Answered**
Chosen Option : **3**

aglasem.com

Q.69 Group-13 elements react with O_2 in amorphous form to form oxides of type M_2O_3 (M = element). Which among the following is the most basic oxide?

Options
1. Ga_2O_3
2. Al_2O_3
3. Tl_2O_3
4. B_2O_3

Question Type : **MCQ**
Question ID : **3666943088**
Option 1 ID : **3666949641**
Option 2 ID : **3666949640**
Option 3 ID : **3666949642**
Option 4 ID : **3666949639**
Status : **Answered**
Chosen Option : **4**

Q.70 If the radius of the first orbit of hydrogen atom is a_o, then de Broglie's wavelength of electron in 3rd orbit is

Options
1. $3\pi a_o$
2. $\frac{\pi a_o}{6}$
3. $6\pi a_o$
4. $\frac{\pi a_o}{3}$

Question Type : **MCQ**
Question ID : **3666943082**
Option 1 ID : **3666949615**
Option 2 ID : **3666949618**
Option 3 ID : **3666949616**
Option 4 ID : **3666949617**
Status : **Answered**
Chosen Option : **4**

aglasem.com

Q.71 The strongest acid from the following is

Options

1. 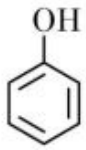

2. 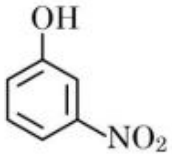

3. 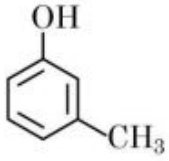

4. 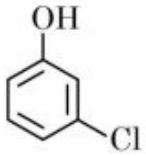

Question Type : **MCQ**
Question ID : **3666943098**
Option 1 ID : **3666949682**
Option 2 ID : **3666949679**
Option 3 ID : **3666949681**
Option 4 ID : **3666949680**
Status : **Answered**
Chosen Option : **3**

Q.72 During the reaction of permanganate with thiosulphate, the change in oxidation of manganese occurs by value of 3. Identify which of the below medium will favour the reaction.

Options

1. both aqueous acidic and neutral

2. aqueous acidic

3. aqueous neutral

4. both aqueous acidic and faintly alkaline

Question Type : **MCQ**
Question ID : **3666943089**
Option 1 ID : **3666949646**
Option 2 ID : **3666949644**
Option 3 ID : **3666949643**
Option 4 ID : **3666949645**
Status : **Answered**
Chosen Option : **4**

aglasem.com

Q.73 Which one of the following elements will remain as liquid inside pure boiling water?

Options
1. Ga
2. Br
3. Li
4. Cs

Question Type : **MCQ**
Question ID : **3666943084**
Option 1 ID : **3666949624**
Option 2 ID : **3666949626**
Option 3 ID : **3666949623**
Option 4 ID : **3666949625**
Status : **Answered**
Chosen Option : **1**

Q.74 The volume of 0.02 M aqueous HBr required to neutralize 10.0 mL of 0.01 M aqueous $Ba(OH)_2$ is (Assume complete neutralization)

Options
1. 2.5 mL
2. 5.0 mL
3. 10.0 mL
4. 7.5 mL

Question Type : **MCQ**
Question ID : **3666943081**
Option 1 ID : **3666949611**
Option 2 ID : **3666949612**
Option 3 ID : **3666949614**
Option 4 ID : **3666949613**
Status : **Answered**
Chosen Option : **2**

aglasem.com

Q.75 Given below are two statements: one is labelled as "**Assertion A**" and the other is labelled as "**Reason R**"

Assertion A: In the complex $Ni(CO)_4$ and $Fe(CO)_5$, the metals have zero oxidation state.

Reason R: Low oxidation states are found when a complex has ligands capable of π-donor character in addition to the σ-bonding.

In the light of the above statements, choose the **most appropriate** answer from the options given below

Options 1. Both **A** and **R** are correct but **R** is **NOT** the correct explanation of **A**

2. Both **A** and **R** are correct and **R** is the correct explanation of **A**

3. **A** is correct but **R** is not correct

4. **A** is not correct but **R** is correct

Question Type : **MCQ**
Question ID : **3666943090**
Option 1 ID : **3666949648**
Option 2 ID : **3666949647**
Option 3 ID : **3666949649**
Option 4 ID : **3666949650**
Status : **Answered**
Chosen Option : **2**

Q.76 Structures of $BeCl_2$ in solid state, vapour phase and at very high temperature respectively are:

Options 1. Polymeric, Monomeric, Dimeric

2. Polymeric, Dimeric, Monomeric

3. Monomeric, Dimeric, Polymeric

4. Dimeric, Polymeric, Monomeric

Question Type : **MCQ**
Question ID : **3666943086**
Option 1 ID : **3666949633**
Option 2 ID : **3666949632**
Option 3 ID : **3666949634**
Option 4 ID : **3666949631**
Status : **Answered**
Chosen Option : **2**

Q.77 Formation of which complex, among the following, is not a confirmatory test of Pb^{2+} ions

Options
1. lead chromate
2. lead iodide
3. lead nitrate
4. lead sulphate

Question Type : **MCQ**
Question ID : **3666943093**
Option 1 ID : **3666949659**
Option 2 ID : **3666949661**
Option 3 ID : **3666949662**
Option 4 ID : **3666949660**
Status : **Not Answered**
Chosen Option : **--**

aglasem.com

Q.78 In the following reaction, 'B' is

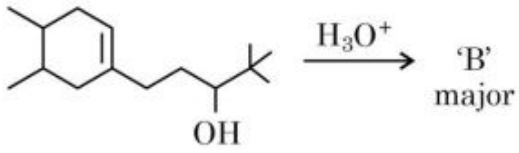

Options

1. 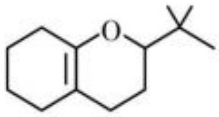

2. 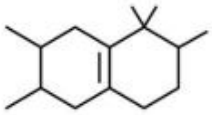

3. 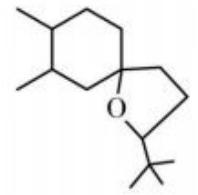

4. 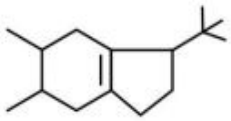

aglasem.com

Question Type : **MCQ**
Question ID : **3666943095**
Option 1 ID : **3666949668**
Option 2 ID : **3666949670**
Option 3 ID : **3666949667**
Option 4 ID : **3666949669**
Status : **Answered**
Chosen Option : **2**

Q.79 Match **List I** with **List II**

List I	List II
Natural Amino acid	**One Letter Code**
(A) Arginine	(I) D
(B) Aspartic acid	(II) N
(C) Asparagine	(III) A
(D) Alanine	(IV) R

Choose the correct answer from the options given below:

Options
1. (A) – I, (B) – III, (C) – IV, (D) – II
2. (A) – IV, (B) – I, (C) – III, (D) – II
3. (A) – IV, (B) – I, (C) – II, (D) – III
4. (A) – III, (B) – I, (C) – II, (D) – IV

Question Type : **MCQ**
Question ID : **3666943099**
Option 1 ID : **3666949685**
Option 2 ID : **3666949686**
Option 3 ID : **3666949683**
Option 4 ID : **3666949684**
Status : **Answered**
Chosen Option : **2**

Q.80 Ion having highest hydration enthalpy among the given alkaline earth metal ions is:

Options
1. Sr^{2+}
2. Ba^{2+}
3. Ca^{2+}
4. Be^{2+}

Question Type : **MCQ**
Question ID : **3666943087**
Option 1 ID : **3666949637**
Option 2 ID : **3666949638**
Option 3 ID : **3666949636**
Option 4 ID : **3666949635**
Status : **Answered**
Chosen Option : **4**

Section : **Chemistry Section B**

aglasem.com

Q.81 Number of isomeric aromatic amines with molecular formula $C_8H_{11}N$, which can be synthesized by Gabriel Phthalimide synthesis is _____.

Given --
Answer :

Question Type : **SA**
Question ID : **3666943110**
Status : **Not Answered**

Q.82 The number of species having a square planar shape from the following is _____.

XeF_4, SF_4, SiF_4, BF_4^-, BrF_4^-, $[Cu(NH_3)_4]^{2+}$, $[FeCl_4]^{2-}$, $[PtCl_4]^{2-}$

Given --
Answer :

Question Type : **SA**
Question ID : **3666943102**
Status : **Not Answered**

Q.83 The standard reduction potentials at 298 K for the following half cells are given below:

$NO_3^- + 4H^+ + 3e^- \rightarrow NO(g) + 2H_2O$ $E^\theta = 0.97$ V

$V^{2+}(aq) + 2e^- \rightarrow V$ $E^\theta = -1.19$ V

$Fe^{3+}(aq) + 3e^- \rightarrow Fe$ $E^\theta = -0.04$ V

$Ag^+(aq) + e^- \rightarrow Ag(s)$ $E^\theta = 0.80$ V

$Au^{3+}(aq) + 3e^- \rightarrow Au(s)$ $E^\theta = 1.40$ V

The number of metal(s) which will be oxidized by NO_3^- in aqueous solution is _____.

Given **2**
Answer :

Question Type : **SA**
Question ID : **3666943106**
Status : **Answered**

Q.84 Consider the following data

Heat of combustion of $H_2(g)$ = -241.8 kJ mol^{-1}

Heat of combustion of C(s) = -393.5 kJ mol^{-1}

Heat of combustion of $C_2H_5OH(l)$ = -1234.7 kJ mol^{-1}

The heat of formation of $C_2H_5OH(l)$ is (–)_____ kJ mol^{-1} (Nearest integer).

Given **278**
Answer :

Question Type : **SA**
Question ID : **3666943103**
Status : **Answered**

aglasem.com

Q.85

Consider the following pairs of solution which will be isotonic at the same temperature. The number of pairs of solutions is / are _____.

A. 1 M aq. NaCl and 2 M aq. urea

B. 1 M aq. $CaCl_2$ and 1.5 M aq. KCl

C. 1.5 M aq. $AlCl_3$ and 2 M aq. Na_2SO_4

D. 2.5 M aq. KCl and 1 M aq. $Al_2(SO_4)_3$

Given --
Answer :

Question Type : **SA**
Question ID : **3666943104**
Status : **Not Answered**

Q.86

Among the following, the number of compounds which will give positive iodoform reaction is _____

(a) 1-Phenylbutan-2-one

(b) 2-Methylbutan-2-ol

(c) 3-Methylbutan-2-ol

(d) 1-Phenylethanol

(e) 3,3-dimethylbutan-2-one

(f) 1-Phenylpropan-2-ol

Given --
Answer :

Question Type : **SA**
Question ID : **3666943109**
Status : **Not Answered**

Q.87

In an ice crystal, each water molecule is hydrogen bonded to _____ neighbouring molecules.

Given **2**
Answer :

Question Type : **SA**
Question ID : **3666943108**
Status : **Answered**

Q.88

The number of colloidal systems from the following, which will have 'liquid' as the dispersion medium, is _____

Gem stones, paints, smoke, cheese, milk, hair cream, insecticide sprays, froth, soap lather

Given **5**
Answer :

Question Type : **SA**
Question ID : **3666943107**
Status : **Answered**

aglasem.com

Q.89

The equilibrium composition for the reaction $PCl_3 + Cl_2 \rightleftharpoons PCl_5$ at 298 K is given below:

$[PCl_3]_{eq} = 0.2$ mol L^{-1} , $[Cl_2]_{eq} = 0.1$ mol L^{-1}, $[PCl_5]_{eq} = 0.40$ mol L^{-1}

If 0.2 mol of Cl_2 is added at the same temperature, the equilibrium concentrations of PCl_5 is _____ $\times 10^{-2}$ mol L^{-1}

Given: K_c for the reaction at 298 K is 20

Given **120**
Answer :

Question Type : **SA**
Question ID : **3666943105**
Status : **Answered**

Q.90

Number of crystal systems from the following where body centred unit cell can be found, is _____

Cubic, tetragonal, orthorhombic, hexagonal, rhombohedral, monoclinic, triclinic

Given **--**
Answer :

Question Type : **SA**
Question ID : **3666943101**
Status : **Not Answered**

aglasem.com