Jammu and Kashmir (JKBOPEE)

B.Sc Nursing / B.Sc Paramedical / B.Sc Tech Courses Entrance Exam 2022

Question Paper

---

aglasem.com

docs.aglasem.com

aglasem.com

...1D

Question Booklet Series:

Entrance Test for B.Sc. Nursing/B.Sc. Paramedical /B.Sc. Tech. courses– 2022

Question Booklet Number:

QUESTION BOOKLET

Maximum Time Allowed : 3 Hours
Negative Marking : 0.25 Marks

No. of Questions: 180
Maximum Marks: 180

Roll Number:

OMR Number:

INSTRUCTIONS

Please read the following instructions carefully:

1) **Check the booklet thoroughly**: In case of any defect – Misprint, missing question(s) or duplication of question(s) / Page(s), get the booklet changed with the booklet of the same series from the Room Invigilator. No complaint shall be entertained after the entrance test is over.

2) Write your Roll Number and the OMR Answer Sheet Number on the question booklet.

3) Mark carefully your Roll Number, Question Booklet Number, Venue Code, Question Booklets series and Course on the OMR Answer sheet and sign at the appropriate place. Candidates shall be personally responsible for any mistake committed in making these entries in the OMR Answer Sheet. Board shall under no circumstances be responsible for any such mistake.

4) Strictly follow the instructions given by the Centre Supervisor / Room Invigilator and those given on the Question Booklet.

5) Candidates are not allowed to carry any papers, notes, books, calculators, cellular phones, scanning devices, pagers etc. to the Examination Hall. Any candidate found using, or in possession of such unauthorized material, indulging in copying or impersonation or adopting unfair means / reporting late / without Admit Card will be debarred from the written test.

6) Please mark the right responses on the OMR Sheet with ONLY a Blue/Black ball point pen. Use of eraser, whitener (fluid) and cutting on the OMR Answer Sheet is NOT allowed.

7) The test is of objective type containing multiple choice questions (MCQs). Each objective question is followed by four responses. Your task is to choose the correct/best response and mark your response on the OMR Answer Sheet and NOT on the Question Booklet.

8) There will be **negative marking of 0.25** marks for every wrong answer.

9) For marking response to a question, completely darken the CIRCLE so that the alphabet inside the CIRCLE is not visible. Darken only ONE circle for each question. If you darken more than one circle, it will be treated as wrong answer. The CORRECT and the WRONG methods of darkening the CIRCLE on the OMR Answer Sheet are shown below.

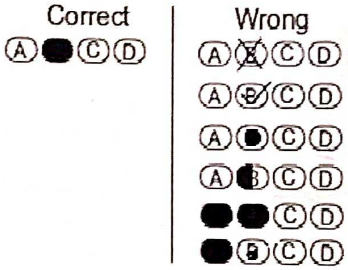

10) Please be careful while marking the response to questions. The response once marked cannot be changed and if done shall be treated as wrong answer.

11) In view of the tight time span, do NOT waste your time on a question which you find to be difficult.

12) DO NOT make any stray marks anywhere in or around the oval on the OMR Answer Sheet. It will be read as double shading and will make answer invalid. DO NOT fold or wrinkle the OMR Answer Sheet.

13) Rough work MUST NOT be done on the OMR Answer Sheet. Use your test booklet for this purpose.

14) Candidates are provided carbonless OMR Answer Sheet having original copy and candidate's copy. After completing the examination, candidates are directed to fold at perforation on the top of the sheet, tear it to separate original copy and candidate's copy and then hand over the original copy of OMR Answer Sheet to the Room Invigilator and take candidate's copy with them.

DO NOT OPEN THE SEAL OF THIS BOOKLET UNTIL TOLD TO DO SO

docs.aglasem.com
aglasem.com

Section 1 - Physics

1) With what potential (approx.) the electrons emitted from the filament of a scanning electron microscope must be accelerated so that the deBroglie wave associated with the moving electron must have a wavelength of 0.1 nm? (Consider, mass of an electron 'm' = rest mass of an electron 'm_0')

A) 100 V
B) 150 V
C) 200 V
D) 250 V

2) What is the physical quantity whose SI unit is Henry?

A) ML^2T^{-2}
B) $ML^2I^{-1}T^{-3}$
C) $ML^2I^2T^{-3}$
D) $ML^2I^{-2}T^{-2}$

3) What will be the ratio of the interference fringe width of red colour (λ_r = 720 nm) to that of voilet light (λ_v = 400 nm)?

A) 3 : 2
B) 2 : 3
C) 9 : 5
D) 5 : 9

4) Fresnel's biprism is a combination of two acute angled prisms to produce two virtual coherent sources from one light source. The refracting angle of a biprism is 0.5° and its refractive index is 1.5. It is kept 10 cm away from a light source. What will be the separation between the two virtual coherent sources obtained?

A) 0.87 mm
B) 1.16 mm
C) 2.62 mm
D) 3.50 mm

5) A body of mass 1 kg initially at rest explodes into three fragments having mass ratio 1 : 2 : 3. The two pieces with mass ratio 1 : 2 fly off perpendicular to each other with the speed of 48 m/s and 18 m/s, respectively. What is the speed of the heaviest fragment?

A) 5 m/s
B) 10 m/s
C) 20 m/s
D) 30 m/s

6) A ball falling from the top of a vertical tower has descended y m when another ball is dropped from a height x m, below the top of the tower. If both the stones fall from rest and reach the ground together, find the height of the tower.

A) (x + y)
B) $(x + y)^2$
C) $(x + y)^2/(4x)$
D) $(x + y)^2/(4y)$

7) A mass of 80 gm of impure sugar is dissolved in 1 litre of water. This sugar solution is filled in a 20 cm long tube. A polarized light of wavelength 600 nm is allowed to pass through this solution along its length. The plane of polarization of the light gets rotated by an angle of 10°. What will be the percentage purity of sugar?

(Specific rotation of sugar is 65°)

A) 3.75%
B) 76.9%
C) 86.25%
D) 96.25%

docs.aglasem.com
aglasem.com

8) Which of the following represents the generalized form of Ampere's Circuital law?

A) $\nabla . B = 0$
B) $\nabla . H = I$
C) $\nabla \times B = \mu_0 J + 5$
D) $\nabla \times H = J + \partial D/\partial t$

9) If a 600 W carrier is modulated to a depth of 80%, then what will be the total power in the modulated wave?

A) 480 W
B) 668 kW
C) 792 W
D) 840 W

10)

$$v_p = \frac{c}{\sqrt{1 - \frac{xN}{f^2}}}$$

The phase velocity (v_p) of a plane electromagnetic wave of frequency f in an ionized medium having electron density N is given by the above relation. Find the value of x.

A) 3
B) 9
C) 27
D) 81

11) In nuclear physics, a magic number is a number of nucleons (either protons or neutrons) such that they are arranged into complete shells within the atomic nucleus. Which of the following numbers is NOT a magic number?

A) 2
B) 8
C) 10
D) 20

12) A sinusoidal plane wave is represented by an equation $\Psi = A\sin[\omega(x/v - k)]$, where ω and v represent the angular velocity and the linear velocity, respectively. Find the dimension of k.

A) L^{-1}
B) T
C) LT
D) T^{-1}

13) At 600 N/m^2 and 30°C, calculate the molecular volume of any ideal gas? Given Universal gas constant is 8314 J/kg mole K.

A) 83.9714 m^3/kg mole
B) 8397.14 m^3/kg mole
C) 41.9857 m^3/kg mole
D) 4198.57 m^3/kg mole

14) The magnetic induction due to a straight wire of length πr carrying a current I at a point P on its bisector and at a distance r from the wire is B. If it is bent in the form of a semicircle, find the fractional change in the magnetic induction at the same point P.

A) $\sqrt{(\pi^2 + 4)} / 2$
B) $2 / \sqrt{(\pi^2 + 4)}$
C) $\sqrt{(\pi^2 + 4)} - 2$
D) $\sqrt{(\pi^2 - 4)}$

15) Which of the following indicates the missing order in the diffraction pattern if the grating element of a diffraction grating is equal to thrice the width of transparencies?

A) 2, 4, 6, 8, 10, ...
B) 3, 6, 9, 12, 15, ...
C) 3, 9, 15, 21, 27, ...
D) 4, 8, 12, 16, 20, ...

docs.aglasem.com
aglasem.com

16) A Carnot engine has an efficiency of 25% when the sink is at temperature of 27°C. What will be the temperature of the source?

A) 127°C
B) 200°C
C) 327°C
D) 400°C

17) Which of the following equations represents a steady current in a conducting medium in the absence of a source of e.m.f?

A) $\nabla \times E = 0$
B) $\nabla \times J = 0$
C) $\nabla^2 V = 0$
D) $\nabla . E = 0$

18) In a common base connection, current amplification factor is 0.85. If the emitter current is 1 mA, then what will be the value of base current?

A) 1.5 mA
B) 1 mA
C) 0.15 mA
D) 0.05 mA

19) The de-Broglie wavelength of a particle with rest mass 'm_0' and kinetic energy 'K' is expressed as 'hc/x'. What will be the expression for 'x'?

(where, c = velocity of light)

A) $K + m_0c^2$
B) $[K + m_0c^2]^{1/2}$
C) $[K(K + m_0c^2)]^{1/2}$
D) $[K(K + 2m_0c^2)]^{1/2}$

20) Find the ratio of the length and the radius of a cylinder having a minimum moment of inertia about an axis through its centre and normal to its length.

A) 1 : 1
B) 2 : 3
C) $\sqrt{3} : \sqrt{2}$
D) $\sqrt{2} : \sqrt{3}$

21) A particle is subjected simultaneously to two simple harmonic motions, represented by the equations $x = 5\sin(\omega t)$ and $y = 4\sin(\omega t + \pi/4)$. What will be the shape of its resultant motion?

A) Straight line inclined to the X-axis at an angle $\tan^{-1}(4/5)$
B) Oblique ellipse lying in the second and the fourth quadrant
C) Symmetrical ellipse of semi major axis 5 units and semi-minor axis 4 units
D) Oblique ellipse lying in the first and the third quadrant

22) Assuming both the gases to be ideal, at what temperature will O_2 gas molecules have the same rms velocity as that of the H_2 gas molecules at temperature of 27°C?

A) 4800°C
B) 4527°C
C) 2400°C
D) 2127°C

23) Two long parallel wires A and B of negligible cross-section are separated by a distance d and uniformly charged such that wire A is having a linear charge density $+\lambda$ while the wire B is having a charge density $-\lambda$. The electric potential at a point between the two wires and at a distance d/3 from the wire A is $V = (\lambda/2\pi\varepsilon_0)\ln x$. Find the value of x.

A) 2
B) 3
C) 4
D) 5

docs.aglasem.com
aglasem.com

24) A uniformly charged circular sheet in the x-y plane has an axis passing through its centre along the z-axis. At what point on this axis is the electric field discontinuous?

A) $z = \pm \infty$
B) $z = 5$
C) $z = -1$
D) $z = 0$

25) In a region of space, 10^{17} electrons per c.c. are moving due north-east at a speed 10^9 cm/s and 5×10^{11} electrons per c.c. are moving along the south - east direction at the same speed. Find the current density vector in the region.

A) 160 A/cm^2; $\tan^{-1}(1/\sqrt{3})$ south of west
B) 80 A/cm^2; $\tan^{-1}(3)$ north of west
C) $80\sqrt{5}$ A/cm^2; $\tan^{-1}(1/3)$ south of east
D) $160\sqrt{2}$ A/cm^2; $\tan^{-1}(\sqrt{3})$ north of west

26) An inductor 10 mH, a capacitor 100 μF and a resistor 10 Ω are connected in series across a source of emf, V = 10 sin314t. The impedance of the circuit is

A) 35 Ω
B) 30 Ω
C) 37 Ω
D) 40 Ω

27) Find the ratio of the magnitude of electric field due to a small dipole at a far-off point on the axial line to that on the equatorial line.

A) 1 : 1
B) 1 : 2
C) 2 : 1
D) 1 : 3

28) The time period (T) of a small vibrating drop of liquid depends on its density (d), radius (r) and surface tension (S). Which of the following represents a dimensionally CORRECT relation for its time period? (The parameter k in the options is a dimensionless constant.)

A) $T = k (d^3r/S)$
B) $T = k \sqrt{(S^2r^2/d)}$
C) $T = k \sqrt{(dr^3/S)}$
D) $T = k (Sr/d^3)$

29) In an electromagnetic wave in free space, the root mean square value of the electric field (E_{rms}) is 8 V/m. What will be the peak value of the magnetic field (B_0)?

A) 2.83×10^{-8} T
B) 3.77×10^{-8} T
C) 4.68×10^{-8} T
D) 5.15×10^{-8} T

30) A crown glass prism of refracting angle 16° is combined with a flint glass prism to obtain deviation without dispersion. If the refractive indices for red and violet rays for crown glass are 1.514 and 1.524 and for the flint glass are 1.645 and 1.665 respectively, then what will be the difference between the angle of the crown glass prism and that of the flint glass prism?

A) 12°
B) 8°
C) 6°
D) 4°

31) Hydrogen atoms in states of high quantum number have been created in the laboratory and observed in space. They are called Rydberg atoms. If the energy of an electron in the first Bohr orbit of hydrogen atom is -13.6 eV and that orbit radius is 0.01 mm, then what is the energy of a hydrogen atom in this state?

A) -2.39×10^{-5} eV
B) -2.39×10^{-6} eV
C) -7.19×10^{-5} eV
D) -7.19×10^{-6} eV

docs.aglasem.com
aglasem.com

32) Water droplets from a tap 5 metres above the ground fall at regular intervals. When the 3rd drop leaves the tap and the 1st drop hits the ground, how much above the ground is the second drop? ($g = 10\ m/s^{-2}$)

A) 2.5 m
B) 3.75 m
C) 5 m
D) 10 m

33) Two bodies of same mass M and 2M are kept separated by a distance d. The gravitational potential at a point where the gravitational intensity produced by them is 0 is -xGM/d. Find the value of x.

A) 3
B) $2\sqrt{2}$
C) $3 + 2\sqrt{2}$
D) $3 - 2\sqrt{2}$

34) An electric field, $E = y^2\,i + x^2\,j$, is distributed in the XY plane. Find the potential difference between the points O (0,0) and P (1,1).

A) 0
B) -2
C) 1
D) -4

35) An ideal gas initially at 27°C temperature is compressed adiabatically to 8/27 times its initial pressure. Find the rise in temperature of the gas. ($\gamma = 5/3$)

A) 27°C
B) 54°C
C) 375°C
D) 327°C

36) An electron in an atom revolves around the nucleus in an orbit of radius 0.53 Å. What will be the equivalent magnetic moment if the frequency of revolution of electron is 7×10^6 MHz?

A) $6.8 \times 10^{-24}\ A/m^2$
B) $9.8 \times 10^{-28}\ A/m^2$
C) $7.8 \times 10^{-26}\ A/m^2$
D) $8.8 \times 10^{-24}\ A/m^2$

37) An aeroplane of mass 10,000 kg runs on the ground for 100 m before take-off. Its take-off speed is 90 km/h. The coefficient of friction between the tyres of the plane and the ground is 0.2. Assuming that the plane accelerates uniformly during the take-off, find the minimum force required by its engine for take-off. (Take $g = 10\ m/s^2$)

A) 10 kN
B) 20 kN
C) 31.25 kN
D) 51.25 kN

38) Two closely wound coils having self inductance L_1 and L_2 are so placed that the magnetic field produced in one of the coils is linked by all the turns of the other. Find the mutual inductance of the coil.

A) L_1L_2
B) $\sqrt{(L_1L_2)}$
C) L_1/L_2
D) $\sqrt{(L_1/L_2)}$

39) What is the amount of work done in moving an object from one point to another on the surface of a spherical shell of mass M and radius R?

A) 0
B) GM/R
C) -GM/R
D) GM/R^2

docs.aglasem.com
aglasem.com

40) A proton and a deuteron having same kinetic energy enters into a region of uniform magnetic field applied perpendicular to its direction of motion. Find the ratio of the area traversed by the path of deuteron to that of the proton.

A) 1 : $\sqrt{2}$
B) $\sqrt{2}$: 1
C) 1 : 2
D) 2 : 1

41) A variable capacitor with a range from 10 pF to 490 pF is used with a coil to form a variable-frequency LC circuit to tune the input to a radio. What is the ratio of maximum frequency to minimum frequency that can be obtained with such a capacitor?

A) 4
B) 5
C) 6
D) 7

42) Consider the common emitter circuit as shown in figure. What will be the value of V_{CE}? Neglect V_{BE}.

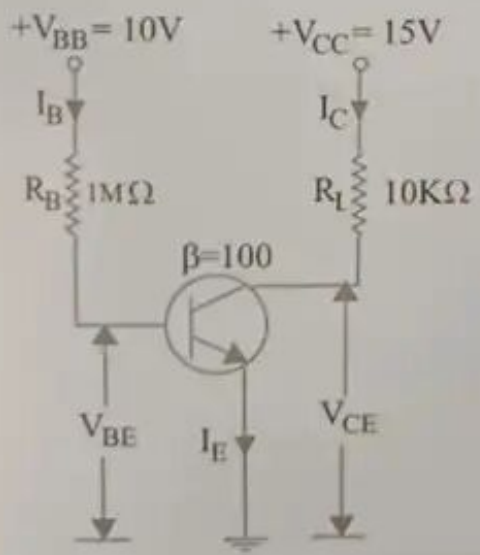

A) 5 V
B) 7.5 V
C) 4 V
D) 10 V

43) A bullet fired with a velocity v_o m/s looses one-third of its velocity when it penetrates through a wooden plank of thickness 0.5m. The resistive force acting on the bullet due to the plank varies as square of its velocity. Find the time (in sec) of motion of the bullet in the plank.

A) ln3 / v_o
B) 1/ (v_o ln3)
C) v_o/ln3
D) v_o ln3

44) In Ramsden's eye-piece, the two plano-convex lenses each of focal length f are separated by a distance of 16 cm. What will be the equivalent focal length (in cm) of the eyepiece?

A) 24 cm
B) 12 cm
C) 16 cm
D) 18 cm

45) A solid spherical ball rolls on a table. What fraction of its total kinetic energy is rotational in nature?

A) 2 : 5
B) 5 : 2
C) 2 : 7
D) 5 : 7

46) A choke and a resistance 25 Ω are connected in series to a 110 V, 60 Hz AC supply. The power consumption of the circuit is 5 W. Find the inductance of the choke.

A) 0.60 H
B) 0.65 H
C) 0.70 H
D) 0.75 H

docs.aglasem.com
aglasem.com

47) A radio station on the surface of the earth radiates 100 kW and the transmitter radiates equally in all directions above the surface of earth. If the amplitude of electric field (E_0) at a point 10 km away from the radio station is $\sqrt{(Z)}$ V/m. then what will be the value of 'Z'?

A) 0.21
B) 1.84
C) 0.12
D) 9.21

48) Which of the following is the vector form of Ohm's law?

A) $V = IR$
B) $\nabla.J + \partial\rho/\partial t = 0$
C) $\nabla.J = 0$
D) $J = \sigma E$

49) A packet is dropped from an aeroplane flying horizontally with a velocity of 720 km/h at an altitude of 980m. After what time, the packet will hit the ground?

A) 14.14 s
B) 28.28 s
C) 1.414 s
D) 2.818s

50) Which component of electric and magnetic fields remains invariant when transformed from a rest frame S to a frame S' moving with a uniform velocity v along the X-direction relative to the rest frame S?

A) E_x; B_x
B) E_x; B_y
C) E_y ; B_x
D) E_y; B_z

51) A 50 Hz, 230 V is applied at the input of a full-wave rectifier circuit. What will be the frequency of its output?

A) 50 Hz
B) 70 Hz
C) 90 Hz
D) 100 Hz

52) A convex lens of focal length f produces an image of an object. What will be the minimum distance between the object and its real image?

A) f
B) 2f
C) 3f
D) 4f

53) What is the acceleration $|a_{max}|$ of a particle executing simple harmonic motion governed by the equation $x = A\sin(\omega t + \phi)$, at an instant where its velocity is minimum?

A) 0
B) $2A\omega$
C) $A\omega$
D) $A\omega^2$

54) The current density inside a conductor of radius R varies radially as $J = J_0 r^2$. Find the total current through the conductor.

A) $J_0\pi R^4$
B) $J_0\pi R^4/2$
C) $2J_0\pi R^4$
D) $4J_0\pi R^4$

55) A man stands on a horizontal platform which vibrates simple harmonically in a vertical plane with a frequency of 10 Hz. Find the displacement at which the man looses contact with the platform. ($g = 10ms^{-2}$)

A) 2.5 cm
B) $2.5/\pi^2$ cm
C) $2.5/\pi$ cm
D) 10 cm

docs.aglasem.com
aglasem.com

56) A simple pendulum has some time period of 1 s and an amplitude of 10°. After 20 oscillations, if its amplitude is reduced to 5°, then the percentage change in its time period is

A) 6%
B) 3%
C) 1.5%
D) 0%

57) If the volume of a solid does not vary with pressure, find the Poisson's ratio for the solid.

A) 0
B) 0.25
C) 0.5
D) -1

58) Two beams A and B are of same material and are of same length and weight. Beam A is having a square cross-section while beam B is having a circular cross-section. Find the ratio of the weight required to produce equal depressions in A and B.

A) 1 : 1
B) 2 : π
C) π : 2
D) π : 3

59) The magnitude of the magnetic flux density at the centre of a square loop of arm length L carrying a current I is defined by the relation $B = n\mu_0 I / \pi L$. Find the value of n.

A) 1
B) $\sqrt{2}$
C) 2
D) $2\sqrt{2}$

60) A ball moving with a speed of 9 m/s collides with an identical stationary ball such that after collision, the direction of each ball makes an angle 30° with the incident direction.

Statement 1: Velocity of each ball after collision is $3\sqrt{3}$ m/s
Statement 2: The collision of the ball is elastic in nature

A) Both the Statements are FALSE
B) Statement 1 is TRUE while Statement 2 is FALSE
C) Statement 1 is FALSE and Statement 1 is TRUE
D) Both the Statements are TRUE

docs.aglasem.com
aglasem.com

Section 2 - Chemistry

61) Among the following statements, which statement is CORRECT with respect to chemical kinetics?

A) Shelf-life is the time required for 90% of the materials to disappear
B) The half-life of a first-order reaction is independent of rate constant of a reaction
C) The unit for the rate constant for a second-order rate reaction is lit.sec^{-1}mol^{-1}
D) Zero-order reaction rate constant has units of lit.mol.sec^{-1}

62) Which of the following equation represents the first law of thermodynamics?

A) dE = dq + 3dw
B) dw = dE + dq
C) dq = dE + dw
D) dq = dE + PdV

63) The product formed when Trimethylamine reacts with benzenesulphonyl chloride is:

A) N-methyl benzene sulphonamide
B) N,N-Dimethyl benzene sulphonamide
C) N,N,N-Trimethyl benzene sulphonamide
D) Trimethylamine does not react with benzene sulphonyl chloride

64) In Co-ordination polymerization which of the following catalysts is used?

A) Lindlar catalyst
B) Ziegler-Natta catalyst
C) Hinsberg catalyst
D) Jacobsen's catalyst

65) Among the following ions, identify the ion whose magnetic moment is zero.

A) Mn^{3+}
B) Zn^{2+}
C) Mn^{2+}
D) Fe^{3+}

66) The type of hybridisation of carbon atom in methanoic acid is:

A) sp3
B) sp2
C) sp
D) sp5

67) In which compound, oxidation state of sulphur is NOT +6?

A) Oleum
B) Sulphuric acid
C) Sulphur trioxide
D) Hydrogen sulphide

68) Hexanedioic acid is commonly called as:

A) Pyruvic acid
B) Tartaric acid
C) Succinic acid
D) Adipic acid

69) Identify the compound in which the type of hybridisation involved is sp3.

A) Xenon hexa-fluoride
B) $[Ni(CN)_4]^{-2}$
C) ICl_2^-
D) Arsenic trichloride

docs.aglasem.com
aglasem.com

70) Identify the compound in which the coordination number is 6 and the crystal structure is octahedral.

A) NaCl
B) CsCl
C) ZnS
D) BN

71) Which of the following orbital has the highest number of nodes?

A) 6f
B) 4s
C) 3p
D) 6d

72) The pressure exerted by 5 moles of an ideal gas at 300 K is 2078.6 mm of Hg. What will be the volume occupied by an ideal gas in lit?

A) 28 lit
B) 45 lit
C) 56 lit
D) 90 lit

73) Identify the compounds that exhibit similar type of hybridisation.

A) Nitrate ions and Stannous chloride
B) Stannous chloride and hydronium ions
C) Nitrate ions and Ammonia
D) Carbonate ions and Ammonia

74) When phenol is treated with formalin in presence of dilute acid or base at low temperature, a mixture of o- and p-hydroxy benzyl alcohol is formed. What is the name of the reaction?

A) Hunsdiecker reaction
B) Hell-Volhard-Zelinsky reaction
C) Lederer-Manasse's reaction
D) Sandmeyer's reaction

75) Electronegativities of Hydrogen and iodine are 2.3 and 4.8 respectively. Calculate the percentage of ionic character in hydrogen iodide according to Pauling?

A) 73.50%
B) 88.62%
C) 63.58%
D) 48.98%

76) Which statement is CORRECT about the process of adsorption?

A) When charcoal is adsorbed by water, adsorption takes place and it is a bulk phenomenon
B) The free energy change of the system is positive for adsorption process
C) It is a spontaneous process
D) It is an endothermic reaction

77) What is the pH of hydrochloric acid if H+ ion concentration of 0.03 M solution is 0.03M?

A) 0.4771
B) 13.523
C) 1.5229
D) 12.472

78) Identify the co-ordination compound that is NOT stable as per effective atomic number (EAN) concept.

A) $[Mn(CN)_4]^{2-}$
B) $[Fe(CN)_6]^{4-}$
C) $[V(CO)_6]^{-}$
D) $[Ni(CO)_4]$

79) What is the rate constant for a reaction following first-order kinetics if a solution of a substance contained 2000 units/ml when prepared and after 25 days, the solution concentration decreased to 1000 units/ml?

A) 0.01386 moles/lit-sec
B) 0.0277 Day^{-1}
C) 0.01386 Day^{-1}
D) 0.0277 moles/lit-sec

docs.aglasem.com
aglasem.com

80) With reference to an organic compound named diethyl oxalate, which of the following statements is CORRECT?

A) It is used to separate a mixture of primary, secondary and tertiary alcohols
B) It is used to separate a mixture of primary, secondary and tertiary carboxylic acids
C) It is used to separate a mixture of primary, secondary and tertiary amines
D) It is used to separate a mixture of primary, secondary and tertiary carbonyl compounds

81) Among the following statements, which statement is NOT correct with respect to states of matter?

A) Iodine and camphor exhibit the property of sublimation
B) Deposition is the reverse process of sublimation
C) Iodine has low vapour pressure
D) When camphor is heated, it directly converts from a solid-state into the vapour phase

82) The value of net dipole moment is zero in the case of the following compound;

A) Ammonia
B) Water
C) Chloroform
D) Carbon tetrachloride

83) Which of the following chemicals is added to LPG (Liquid Petroleum Gas) to detect its leakage?

A) Butane
B) Hydrogen Sulphide
C) Ethyl Mercaptan
D) Propane

84) What is the oxidation number of Nickel in the complex $[Ni(CO)_4]$?

A) 6
B) 4
C) 2
D) 0

85) K_b (basicity constant) value of water at 25°C was found to be 4×10^{-7}. Calculate K_a (acidity constant) value for hydronium ion?

A) 25×10^{-7}
B) 4×10^{-7}
C) 0.25×10^{-7}
D) 4×10^{-6}

86) In which process, the expression for first law of Thermodynamics is modified to $dE = dW$?

A) Adiabatic process
B) Isothermal process
C) Isometric process
D) Isobaric process

87) A complex 'X' has reacted with $AgNO_3$ solution and formed 2 moles of silver chloride as a precipitate. What is 'X' in the reaction?

A) $[Co(NH_3)_4Cl_2]Cl$
B) $[Co(NH_3)_3Cl_3]$
C) $[Co(NH_3)_5Cl]Cl_2$
D) $[Co(NH_3)_6]Cl_3$

88) A compound behaves as an ideal gas in vapor state. 1 g of compound occupies a volume of 200 mL at a pressure of 4 atm and at a temperature of 300 K. Calculate the molecular weight of the gas.

A) 90.78 g/mol
B) 78.62 g/mol
C) 53.25 g/mol
D) 30.75 g/mol

docs.aglasem.com
aglasem.com

89) Among the given options, identify the electronic configuration of the element that has the highest electron affinity value in the periodic table.

A) $1s^2\ 2s^2\ 2p^4$
B) $1s^2\ 2s^2\ 2p^6\ 3s^2\ 3p^5$
C) $1s^2\ 2s^2\ 2p^6\ 3s^2\ 3p^4$
D) $1s^2\ 2s^2\ 2p^5$

90) Hexamethylenediamine when condensed with a reagent 'X', a polyamide known as Nylon-6,6 (Nylon 66) is obtained. What is the reagent 'X'?

A) Adipic acid
B) Succinic acid
C) Periodic acid
D) Persulphuric acid

91) The uncertainty in the position of a particle is $2x10^{-10}$m. What is the uncertainty in its momentum if $h=6.6 \times 10^{-34}$ kgm^2s^{-1} and $\pi=3$?

A) 27.5×10^{-21} g-cm/s
B) 27.5×10^{-18} g-cm/s
C) 27.5×10^{-27} g-cm/s
D) 27.55×10^{-30} g-cm/s

92) Identify the statement that is CORRECT with respect to molecules of life.

A) Glycine is considered to be the parent of all other amino acids except alanine
B) Tyrosine contains indole ring in the R-chain of aminoacid
C) Amide group of threonine participates in the hydrogen bond formation with water
D) Histidine acts as biological buffer in the biosynthesis of proteins as its isoelectric point is near physiological pH

93) Which one of the following amino acids is classified as an aromatic amino acid?

A) Leucine
B) Tryptophan
C) Valine
D) Alanine

94) Which among the following compounds exhibits cis-trans isomerism?

A) $(C_3H_7)_2C=CH(CH_3)$
B) $CCl_2=CH(CH_3)$
C) $(C_4H_9)CH=CH(C_2H_5)$
D) $CH_2=CH(CH_3)$

95) Which statement is NOT CORRECT about the process of chemisorption?

A) Strong covalent forces operate between the adsorbate and the surface of adsorbent
B) It is an instantaneous process and equilibrium is attained very rapidly
C) The formation of tungsten oxide when tungsten is heated at 1200 K is an example for the surface compound formed during chemisorption process
D) It is irreversible in nature

96) The series of hydrogen spectrum that is obtained when an electron jumps from the 5th energy level to the 3rd energy level is;

A) Lyman
B) Brackett
C) Balmer
D) Paschen

97) What is the IUPAC name of

$CHO-CH_2-CH(OH)-CH(Br)-CH(C_4H_9)-CH_2(CH_3)$?

A) 4-Bromo-3-hydroxy-5-butyl-heptan-1-al
B) 4-Bromo-5-hydroxy-3-butyl-heptan-7-al
C) 4-Bromo-5-ethyl-3-hydroxy-nonan-1-al
D) 5-Bromo- 6-hydroxy-4-ethyl-nonan-1-al

docs.aglasem.com
aglasem.com

98) Which of the following statements is NOT correct in an adiabatic process?

A) dq = 0
B) dw = dE
C) Heat is neither lost nor gained
D) The reaction is carried out in a constant-temperature bath

99) High boiling point is observed in which one of the following compounds?

A) n-Hexane
B) 2-methylpropane
C) 2, 2-Dimethylbutane
D) 2 -methylbutane

100)

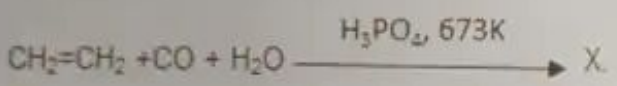

What is the functional group present in the product 'X' and what is the name of this reaction?

A) Carboxylic acid, Koch reaction
B) Alkyl halide, Sandmeyer's reaction
C) Alcohol, Hell Volhard Zelinski reaction
D) Ketones, Hunsdiecker reaction

101) Identify the statement that is TRUE with respect to representative elements of a periodic table.

A) Size of M+ ion is of the order:
Li+ < Na+ < K+< Cs+ < Rb+
B) Lattice energy of Lithium halides is of the order:
LiF< LiCl< LiBr <LiI
C) Lattice energy of NaF is smaller than MgF_2
D) Ionic solids like KCl, KBr and KI are soluble in water

102) Which among the following ligands is an Ambidentate ligand?

A) Cl^-
B) NH_3
C) NO_2^-
D) H_2O

103) Which of the following acids contain 16 sigma bonds and 1 pi bond in its molecular structure?

A) Glutaric acid
B) Tartaric acid
C) Pyruvic acid
D) Valeric acid

104) Identify the element present in 3rd Period and belonging to IA group?

A) Lithium
B) Boron
C) Sodium
D) Potassium

105) What is the product formed when C_6H_5OH and $C_6H_5NH_2$ are heated in the presence of anhydrous zinc chloride at 200°C?

A) 3-hydroxy aniline
B) Diphenylamine
C) 1-hydroxy aniline
D) Phenol and aniline do not react even when they are heated

106) Which of the following statements is NOT correct for a thermodynamic process?

A) The first law of thermodynamics is a statement of the conservation of energy
B) The chemical potential is an extensive property and it is independent of the number of moles of the components of the system
C) Work done is maximum when it is done reversibly in an isothermal expansion
D) The free energy change is zero for a closed system at equilibrium and constant temperature and pressure

docs.aglasem.com
aglasem.com

107) Among the following elements, identify the element that is a chalcogen.

A) Phosphorus
B) Chlorine
C) Sulphur
D) Boron

108) Among the following acids, identify the triprotic acid?

A) Carbonic acid
B) Nitric acid
C) Sulphuric acid
D) Phosphoric acid

109) The isoelectric point of glycine is 5.97. One region of buffering action is centered on 2.34. What is the value of another buffering region where it is centered?

A) 3.63
B) 8.31
C) 9.6
D) 10.6

110)

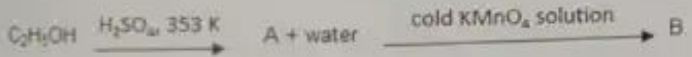

What are A, B respectively in the reaction?

A) Acetylene and acetaldehyde
B) Acetaldehyde and ethylene
C) Ethylene and ethylene glycol
D) Ethylene and acetylene

111) With reference to representative elements of a periodic table, identify the statement that is CORRECT.

A) Ionic potential is the ratio of charge on the ion divided by the radius of the ion
B) An ion with low ionic potential will get hydrated easily than the ion with high ionic potential
C) Hydration energy decreases when the size of the alkali ion decreases
D) As the size of the halide ion increases, hydration energy increases

112) What is the product obtained when acrylonitrile undergoes free radical vinyl polymerization?

A) Nylon
B) Styrene
C) Orlon
D) Polyethylene

113) An electrochemical cell is formed by placing a solution between the Calomel electrode and the hydrogen electrode. The EMF of the cell thus obtained was found to be +0.865 V at 298 K. Calculate pH of the solution placed between two electrodes. (Standard electrode potential of the calomel electrode is +0.235 V)

A) 10.64
B) 12.33
C) 15.85
D) 8.68

114) What is the OH^- ion concentration of a $4x10^{-4}$ M aqueous solution of NH_4OH in moles/lit if k_b value is found to be $1.6x10^{-7}$ at 25 °C?

A) 0.25×10^{4}
B) 8×10^{-6}
C) 4×10^{-4}
D) 64×10^{-12}

115) The correct schematic representation of Daniel cell is

A) $Zn^{2+}(c_{Zn2+})/Zn \,//\, Cu^{2+}(c_{Cu2+})Cu$
B) $Cu^{2+}(c_{Cu2+})/Cu \,//\, Zn^{2+}(c_{Zn2+})/Zn$
C) $Zn/Zn^{2+}(c_{Zn2+}) \,//\, Cu2+(c_{Cu2+})/Cu$
D) $Cu/Cu^{2+}(c_{Cu2+}) \,///Zn2+(c_{Zn2+})/Zn$

docs.aglasem.com
aglasem.com

116) A system is formed by 2 components and consists of solid and liquid phases. Degrees of Freedom for this system is found to be;

A) 0
B) 1
C) 2
D) 3

117) 3.725 g of KCl is dissolved in water to make 250 mL of solution. Calculate the molarity of the solution.

A) 0.05 M
B) 0.1 M
C) 0.15 M
D) 0.2 M

118) What is the ionic strength of 0.02 M barium sulphate solution?

A) 0.02
B) 0.08
C) 0.04
D) 0.06

119) Identify the statement that is INCORRECT with respect to alcohols.

A) On oxidation, primary alcohols yield aldehydes with mild oxidising agents
B) The product formed in Schotten-Baumann reaction is 3,5-Dinitro benzoyl chloride
C) When Lucas reagent is added to secondary alcohols, the reaction mixture gets cloudy in 5-10 minutes
D) Ketones are obtained when secondary alcohols is heated over copper at 573K

120) With reference to the periodic table, which among the following elements is a transition element?

A) Zinc
B) Cadmium
C) Mercury
D) Nickel

docs.aglasem.com

aglasem.com

121) In a cell, rough endoplasmic reticulum are involved in

A) protein synthesis
B) production of ATP
C) photosynthesis
D) production of lipids

122) The characteristic feature of double fertilisation and triple fusion is found in which of the following plant groups?

A) Angiosperms
B) Gymnosperms
C) Thallophyta
D) Pteridophyta

123) Growth in plants is largely restricted to specialised regions of active cell division called meristems. The meristem which occurs between mature tissues is known as

A) epidermis
B) apical meristem
C) axillary bud
D) intercalary meristem

124) Some carrier or transport proteins allow diffusion only if two types of molecules move together. When a molecule moves across a membrane independent of other molecules, the process is called

A) uniport
B) symport
C) antiport
D) turgid

125) Which layer of the pollen grain has prominent apertures called germ pores where sporopollenin is absent?

A) Vegetative cell
B) Exine
C) Intine
D) Generative cell

126) Where are the velamen cells located in the roots of orchids?

A) below the endodermis
B) outside the exodermis
C) inside the cortex
D) inside the stele region

127) The primary CO_2 acceptor in Hatch and Slack pathway is

A) Malate
B) Succinate
C) Pyruvic acid
D) Phosphoenolpyruvate

128) The stomach located in the upper left portion of the abdominal cavity has three major parts. In which of the following part oesophagus opens?

A) caecum
B) pyloric
C) fundic
D) cardiac

129) The insertion of genes into an individual's cells and tissues to treat diseases especially hereditary diseases is

A) bioremediation
B) bioaccumulation
C) biopiracy
D) gene therapy

docs.aglasem.com

aglasem.com

130) Bt toxin is produced by a bacterium called

A) Monascus purpureus
B) Aspergillus niger
C) Trichoderma polysporum
D) Bacillus thuringiensis

131) Name the microorganism used in the commercial production of Citric acid?

A) Clostridium butylicum
B) Aspergillus niger
C) Acetobacter aceti
D) Saccharomyces cerevisiae

132) Which of the following cells lined inside the seminiferous tubules provide nutrition to the germ cells?

A) Fimbriae
B) Leydig cells
C) Interstitial cells
D) Sertoli cells

133) The mesh like structures formed from the masses of bacteria held together by slime and fungal filaments in waste water treatment is called as

A) primary sludge
B) activated sludge
C) anaerobic sludge
D) flocs

134) In humans, small intestine is distinguishable into three regions which includes all of the following EXCEPT:

A) duodenum
B) jejunum
C) stomach
D) ileum

135) Name the element which is essential for pollen germination?

A) Magnesium
B) Calcium
C) Boron
D) Nitrogen

136) Reproduction is the process of production of new individuals from their parents. The process of removal of anthers from the floral bud before the anther dehiscence is called as

A) Fragmentation
B) Pollination
C) Budding
D) Emasculation

137) Plant cells are connected and communicate with each other via

A) Desmosomes
B) Tight junctions
C) Gap junctions
D) Plasmodesmata

138) Which of the following is an example of man-made ecosystem?

A) Forest
B) Crop fields
C) Pond
D) Desert

139) Plant groups are called amphibians of plant kingdom because they need both land and water to complete their life cycle. Name the plant group:

A) Tracheophyta
B) Gymnosperms
C) Bryophyta
D) Thallophyta

docs.aglasem.com
aglasem.com

140) The part of leaf by which it is attached to the stem is called

A) veins
B) lamina
C) petiole
D) midrib

141) In male reproductive system, which of the following helps in maintaining the low temperature of the testes necessary for spermatogenesis?

A) Scrotum
B) Vasa efferentia
C) Rete testis
D) Ejaculatory duct

142) Cyclosporin A used as an immunosuppressive agent is produced from the organism

A) Penicillium notatum
B) Saccharomyces cerevisiae
C) Monascus purpureus
D) Trichoderma polysporum

143) The tendency of an offspring to resemble its parent is known as

A) heredity
B) phenotype
C) allele
D) genome

144) The collection of genes of an individual is called as

A) Phenotype
B) Genotype
C) Dominant
D) Recessive

145) Fluid mosaic model of the cell membrane was proposed by

A) Singer and Nicolson
B) J. David Robertson
C) Danielli and Davson
D) Robert Brown and Alfred Hershey

146) Which one of the following factors given below exclusively affects reproduction in seasonal breeders in both plants and animals?

A) Biomass
B) Decomposers
C) Biomolecules
D) Photoperiod

147) The example of a sex-linked recessive disorder is

A) Hemophilia A
B) Huntington disease
C) Marfan syndrome
D) Cystic fibrosis

148) Transfer of sperms into the female genital tract is

A) gestation
B) implantation
C) insemination
D) parturition

149) Acid rain is caused by a chemical reaction that begins when compounds like

A) carbon monoxide and oxygen are released into the air
B) sulfur dioxide and nitrogen oxides are released into the air
C) carbon dioxide and hydrogen are released into the air
D) ammonia and hydrogen are released into the air

docs.aglasem.com
aglasem.com

150) Glycolysis is the first phase of cellular respiration. It takes place in the

A) cytoplasm
B) mitochondria
C) chloroplast
D) lysosome

151) The dough which is used for making foods such as dosa and idli is also fermented by bacteria. The puffed-up appearance of dough is due to the production of

A) hydrogen gas
B) nitrogen dioxide gas
C) oxygen gas
D) carbon dioxide gas

152) The position of the youngest floral bud in acropetal succession of an inflorescence is at

A) Distal
B) Proximal
C) Intercalary
D) lateral

153) A pair of genes that occupy a specific location on a particular chromosome and control the same trait are

A) recessive
B) dominant
C) alleles
D) phenotype

154) Select the example for dominant epistasis

A) Albinism
B) Labrador retriever colour
C) Fruit colour in squash
D) Colour of fur in mice

155) Microsporangium is generally surrounded by four wall layers. Which is the innermost wall layer that nourishes the developing pollen grains?

A) Endothecium
B) Epidermis
C) Sporogenous tissue
D) Tapetum

156) Micro-organisms such as Lactobacillus and others commonly called lactic acid bacteria (LAB) grow in milk and convert it into

A) curd
B) ghee
C) butter
D) ethanol

157) Which type of epithelium tissue is made of a single thin layer of flattened cells with irregular boundaries?

A) Simple cuboidal epithelium
B) Simple columnar epithelium
C) Simple squamous epithelium
D) Ciliated columnar epithelium

158) Name the means of transport of male gametes in bryophytes and pteridophytes

A) Water
B) Soil
C) Air
D) Rock

159) A graphical representation of the possible genotypes of an offspring arising from a particular cross or breeding event is

A) Punnett square
B) Chi-square test
C) Z-test
D) Pie chart

docs.aglasem.com
aglasem.com

160) Which one of the following human ligament is called Y-shaped ligament of Bigelow?

A) iliofemoral ligament
B) cricothyroid ligament
C) periodontal ligament
D) radial collateral ligament

161) The humus is further degraded by some microbes and release of inorganic nutrients occur by the process known as

A) stratification
B) fragmentation
C) decomposition
D) mineralisation

162) Name the pigment that gives a pinkish hue to rhizobium induced root nodules during nitrogen fixation

A) Carotenoid
B) Mauveine
C) Phycobilin
D) Leghemoglobin

163) The process of conversion of complex food substances to simple absorbable forms is called

A) Circulation
B) Excretion
C) Respiration
D) Digestion

164) Epiphytic root develop from stem and freely hang in the air, they are provided with an outer covering known as

A) Velamen
B) Phylloclade
C) Lamina
D) Pneumatophore

165) Which of the following enzyme in the pancreatic juice acts on nucleic acids to form nucleotides and nucleosides?

A) Lipases
B) Amylase
C) Nucleases
D) Maltase

166) The information carried by a Monograph is on

A) any one taxon
B) inheritance
C) variation
D) migration

167) Ecology is the study of the relationship between the environment and organisms. The natural residence of every organism is known as

A) Mutation
B) Habitat
C) Biome
D) Migration

168) Name the cell organelles which have its own DNA?

A) Mitochondria and Chloroplast
B) Golgi complex and Ribosomes
C) Endoplasmic Reticulum and Lysosomes
D) Nucleus and Vacuoles

169) A monohybrid cross results in a phenotypic ratio of

A) 1:2:1
B) 3:1
C) 2:2
D) 1:4

docs.aglasem.com
aglasem.com

170) The oral cavity has a number of teeth and a muscular tongue. Each tooth is embedded in a socket of jaw bone, this type of attachment is called

A) papillae
B) thecodont
C) diphyodont
D) mastication

171) Gross primary productivity minus respiration losses (R), is the

A) fragmentation
B) secondary productivity
C) net primary productivity
D) catabolism

172) Biological nitrogen fixation (BNF) occurs when atmospheric nitrogen is converted to ammonia by an enzyme called

A) Amylase
B) Nitrogenase
C) Lipase
D) Catalase

173) Name the hormone involved in phototropism

A) Abscisic acid
B) Indole-3-acetic acid
C) Kinetin
D) Cytokinin

174) The cell organelle which is bounded by a single-membrane is

A) Nucleus
B) Chloroplast
C) Vacuole
D) Mitochondria

175) Identify the plant hormone which is a derivative of carotenoids.

A) Abscisic Acid
B) Indole-3-acetic acid
C) Indole butyric acid
D) Gibberellic acid

176) Name the temporary vascular organ found in mammals, which attaches the fetus to the uterus of the mother during pregnancy.

A) Placenta
B) Amnion
C) Cervix
D) Endometrium

177) The enlarged end of penis called the glans penis is covered by a loose fold of skin called

A) endometrium
B) uterus
C) foreskin
D) vagina

178) In female reproductive system, the edges of the infundibulum possess finger-like projections called

A) fimbriae
B) rectum
C) ampulla
D) isthmus

179) Name the cells present in the Bowman capsule that wrap around the capillaries of the glomerulus.

A) Kupffer cells
B) Chief cells
C) Podocytes
D) Osteocytes

docs.aglasem.com
aglasem.com

180) Pollen grains are generally spherical measuring about 25-50 micrometers in diameter. The hard outer layer is called the exine made up of

A) pectin

B) cellulose

C) sporopollenin

D) chitin

docs.aglasem.com

aglasem.com