AglaSem Admission

PI : PRODUCTION AND INDUSTRIAL ENGINEERING

Duration: Three Hours *Maximum Marks*: 100

Read the following instructions carefully.

1. Do not open the seal of the Question Booklet until you are asked to do so by the invigilator.

2. Take out the **O**ptical **R**esponse **S**heet (**ORS)** from this Question Booklet **without breaking the seal** and read the instructions printed on the ORS carefully.

3. On the right half of the **ORS,** using ONLY a **black ink ball point pen**, (i) darken the bubble corresponding to your test paper code and the appropriate bubble under each digit of your registration number and (ii) write your registration number, your name and name of the examination centre and put your signature at the specified location.

4. This Question Booklet contains **16** pages including blank pages for rough work. After you are permitted to open the seal, please check all pages and report discrepancies, if any, to the invigilator.

5. There are a total of 65 questions carrying 100 marks. All these questions are of objective type. Each question has only **one** correct answer. Questions must be answered on the left hand side of the **ORS** by darkening the appropriate bubble (marked A, B, C, D) using ONLY a **black ink ball point pen** against the question number. **For each question darken the bubble of the correct answer**. More than one answer bubbled against a question will be treated as an incorrect response.

6. Since bubbles darkened by the black ink ball point pen **cannot** be erased, candidates should darken the bubbles in the ORS **very carefully**.

7. Questions Q.1 – Q.25 carry 1 mark each. Questions Q.26 – Q.55 carry 2 marks each. The 2 marks questions include two pairs of common data questions and two pairs of linked answer questions. The answer to the second question of the linked answer questions depends on the answer to the first question of the pair. If the first question in the linked pair is wrongly answered or is unattempted, then the answer to the second question in the pair will not be evaluated.

8. Questions Q.56 – Q.65 belong to General Aptitude (GA) section and carry a total of 15 marks. Questions Q.56 – Q.60 carry 1 mark each, and questions Q.61 – Q.65 carry 2 marks each.

9. Unattempted questions will result in zero mark and wrong answers will result in **NEGATIVE** marks. For all 1 mark questions, ⅓ mark will be deducted for each wrong answer. For all 2 marks questions, ⅔ mark will be deducted for each wrong answer. However, in the case of the linked answer question pair, there will be negative marks only for wrong answer to the first question and no negative marks for wrong answer to the second question.

10. Calculator is allowed whereas charts, graph sheets or tables are **NOT** allowed in the examination hall.

11. Rough work can be done on the question paper itself. Blank pages are provided at the end of the question paper for rough work.

12. Before the start of the examination, write your name and registration number in the space provided below using a black ink ball point pen.

Name								
Registration Number	**PI**							

www.admission.aglasem.com

AglaSem Admission

Q. 1 – Q. 25 carry one mark each.

Q.1 $\lim_{x\to 0}\left(\frac{1-\cos x}{x^2}\right)$ is

(A) 1/4 (B) 1/2 (C) 1 (D) 2

Q.2 For the spherical surface $x^2+y^2+z^2=1$, the unit outward normal vector at the point $(\frac{1}{\sqrt{2}},\frac{1}{\sqrt{2}},0)$ is given by

(A) $\frac{1}{\sqrt{2}}\hat{i}+\frac{1}{\sqrt{2}}\hat{j}$ (B) $\frac{1}{\sqrt{2}}\hat{i}-\frac{1}{\sqrt{2}}\hat{j}$

(C) $\hat{k}$ (D) $\frac{1}{\sqrt{3}}\hat{i}+\frac{1}{\sqrt{3}}\hat{j}+\frac{1}{\sqrt{3}}\hat{k}$

Q.3 Consider the function $f(x)=|x|$ in the interval $-1\le x\le 1$. At the point x = 0, *f(x)* is

(A) continuous and differentiable.
(B) non-continuous and differentiable.
(C) continuous and non-differentiable.
(D) neither continuous nor differentiable.

Q.4 At $x = 0$, the function $f(x)=x^3+1$ has

(A) a maximum value (B) a minimum value
(C) a singularity (D) a point of inflection

Q.5 The area enclosed between the straight line $y = x$ and the parabola $y = x^2$ in the *x-y* plane is

(A) 1/6 (B) 1/4 (C) 1/3 (D) 1/2

Q.6 For a long slender column of uniform cross section, the ratio of critical buckling load for the case with both ends clamped to the case with both ends hinged is

(A) 1 (B) 2 (C) 4 (D) 8

Q.7 A thin walled spherical shell is subjected to an internal pressure. If the radius of the shell is increased by 1% and the thickness is reduced by 1%, with the internal pressure remaining the same, the percentage change in the circumferential (hoop) stress is

(A) 0 (B) 1 (C) 1.08 (D) 2.02

Q.8 A cantilever beam of length *L* is subjected to a moment *M* at the free end. The moment of inertia of the beam cross section about the neutral axis is *I* and the Young's modulus is *E*. The magnitude of the maximum deflection is

(A) $\frac{ML^2}{2EI}$ (B) $\frac{ML^2}{EI}$ (C) $\frac{2ML^2}{EI}$ (D) $\frac{4ML^2}{EI}$

Q.9 A circular solid disc of uniform thickness 20 *mm*, radius *200 mm* and mass *20 kg*, is used as a flywheel. If it rotates at 600 rpm, the kinetic energy of the flywheel, in *Joules* is

(A) 395 (B) 790
(C) 1580 (D) 3160

www.admission.aglasem.com

AglaSem Admission

Q.10 In the mechanism given below, if the angular velocity of the eccentric circular disc is 1 *rad/s*, the angular velocity (*rad/s*) of the follower link for the instant shown in the figure is

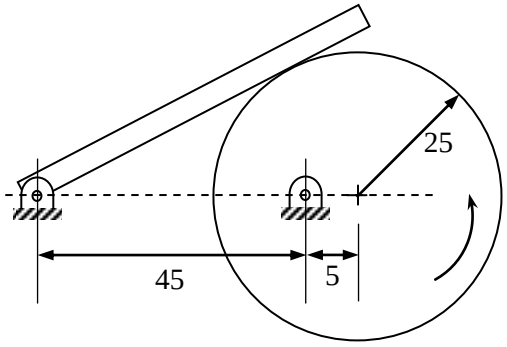

Note: All dimensions are in *mm*.

(A) 0.05 (B) 0.1 (C) 5.0 (D) 10.0

Q.11 Steam enters an adiabatic turbine operating at steady state with an enthalpy of 3251.0 *kJ/kg* and leaves as a saturated mixture at 15 *kPa* with quality (dryness fraction) 0.9. The enthalpies of the saturated liquid and vapor at 15 *kPa* are h_f = 225.94 *kJ/kg* and h_g = 2598.3 *kJ/kg* respectively. The mass flow rate of steam is 10 *kg/s*. Kinetic and potential energy changes are negligible. The power output of the turbine in *MW* is

(A) 6.5 (B) 8.9 (C) 9.1 (D) 27.0

Q.12 An ideal gas of mass *m* and temperature T_1 undergoes a reversible isothermal process from an initial pressure P_1 to final pressure P_2. The heat loss during the process is *Q*. The entropy change ΔS of the gas is

(A) $mR\ln\left(\frac{P_2}{P_1}\right)$ (B) $mR\ln\left(\frac{P_1}{P_2}\right)$

(C) $mR\ln\left(\frac{P_2}{P_1}\right)-\frac{Q}{T_1}$ (D) *zero*

Q.13 For an opaque surface, the absorptivity (α), transmissivity (τ) and reflectivity (ρ) are related by the equation:

(A) $\alpha+\rho=\tau$ (B) $\rho+\alpha+\tau=0$ (C) $\alpha+\rho=1$ (D) $\alpha+\rho=0$

Q.14 Which one of the following configurations has the highest fin effectiveness?

(A) Thin, closely spaced fins (B) Thin, widely spaced fins
(C) Thick, widely spaced fins (D) Thick, closely spaced fins

Q.15 Oil flows through a 200 *mm* diameter horizontal cast iron pipe (friction factor, f = 0.0225) of length 500 *m*. The volumetric flow rate is 0.2 m^3/s. The head loss (in *m*) due to friction is (assume $g = 9.81\ m/s^2$)

(A) 116.18 (B) 0.116 (C) 18.22 (D) 232.36

Q.16 A solid cylinder of diameter 100 *mm* and height 50 *mm* is forged between two frictionless flat dies to a height of 25 *mm*. The percentage change in diameter is

(A) 0 (B) 2.07 (C) 20.7 (D) 41.4

www.admission.aglasem.com

AglaSem Admission

Q.17 In an interchangeable assembly, shafts of size $25.000^{+0.040}_{-0.010}$ *mm* mate with holes of size $25.000^{+0.030}_{+0.020}$ *mm*. The maximum interference (in *microns*) in the assembly is

(A) 40 (B) 30 (C) 20 (D) 10

Q.18 A CNC vertical milling machine has to cut a straight slot of 10 *mm* width and 2 *mm* depth by a cutter of 10 *mm* diameter between points (0, 0) and (100, 100) on the *XY* plane (dimensions in *mm*). The feed rate used for milling is 50 *mm/min*. Milling time for the slot (in *seconds*) is

(A) 120 (B) 170 (C) 180 (D) 240

Q.19 Match the following metal forming processes with their associated stresses in the workpiece.

	Metal forming process		**Type of stress**
1.	Coining	P.	Tensile
2.	Wire Drawing	Q.	Shear
3.	Blanking	R.	Tensile and compressive
4.	Deep Drawing	S.	Compressive

(A) 1-S, 2-P, 3-Q, 4-R (B) 1-S, 2-P, 3-R, 4-Q
(C) 1-P, 2-Q, 3-S, 4-R (D) 1-P, 2-R, 3-Q, 4-S

Q.20 During *normalizing* process of steel, the specimen is heated

(A) between the upper and lower critical temperature and cooled in still air.
(B) above the upper critical temperature and cooled in furnace.
(C) above the upper critical temperature and cooled in still air.
(D) between the upper and lower critical temperature and cooled in furnace.

Q.21 In abrasive jet machining, as the distance between the nozzle tip and the work surface increases, the material removal rate

(A) increases continuously.
(B) decreases continuously.
(C) decreases, becomes stable and then increases.
(D) increases, becomes stable and then decreases.

Q.22 Which one of the following is NOT a decision taken during the aggregate production planning stage?

(A) Scheduling of machines (B) Amount of labour to be committed
(C) Rate at which production should happen (D) Inventory to be carried forward

Q.23 Which one of the following is NOT associated with the process of new product development?

(A) QFD (B) FEMA (C) KANBAN (D) DFMA

www.admission.aglasem.com

AglaSem Admission

Q.24 A process needs to be standardized for method and time. Which one of the following represents the sequence of work study experiments?

(A) Time study followed by method study
(B) Only time study
(C) Time study and method study simultaneously
(D) Method study followed by time study

Q.25 Reduction in the variability of manufactured product characteristics will definitely result in observations close to

(A) the upper control limit in $\overline{X}$ chart.
(B) the lower control limit in $\overline{X}$ chart.
(C) the lower control limit in *R* chart.
(D) the center line in *R* chart.

www.admission.aglasem.com

AglaSem Admission

Q. 26 - Q. 55 carry two marks each.

Q.26
$$\begin{aligned} x+2y+z &= 4 \\ 2x+y+2z &= 5 \\ x-y+z &= 1 \end{aligned}$$

The system of algebraic equations given above has

(A) a unique solution of $x = 1$, $y = 1$ and $z = 1$.
(B) only the two solutions of ($x = 1$, $y = 1$, $z = 1$) and ($x = 2$, $y = 1$, $z = 0$).
(C) infinite number of solutions.
(D) no feasible solution.

Q.27 For the matrix $\mathbf{A} = \begin{bmatrix} 5 & 3 \\ 1 & 3 \end{bmatrix}$, ONE of the normalized eigen vectors is given as

(A) $\begin{pmatrix} \frac{1}{2} \\ \frac{\sqrt{3}}{2} \end{pmatrix}$ (B) $\begin{pmatrix} \frac{1}{\sqrt{2}} \\ \frac{-1}{\sqrt{2}} \end{pmatrix}$ (C) $\begin{pmatrix} \frac{3}{\sqrt{10}} \\ \frac{-1}{\sqrt{10}} \end{pmatrix}$ (D) $\begin{pmatrix} \frac{1}{\sqrt{5}} \\ \frac{2}{\sqrt{5}} \end{pmatrix}$

Q.28 Consider the differential equation $x^2 \frac{d^2y}{dx^2} + x\frac{dy}{dx} - 4y = 0$ with the boundary conditions of $y(0) = 0$ and $y(1) = 1$. The complete solution of the differential equation is

(A) x^2 (B) $\sin\left(\frac{\pi x}{2}\right)$ (C) $e^x \sin\left(\frac{\pi x}{2}\right)$ (D) $e^{-x} \sin\left(\frac{\pi x}{2}\right)$

Q.29 The inverse Laplace transform of the function $F(s) = \frac{1}{s(s+1)}$ is given by

(A) $f(t) = \sin t$ (B) $f(t) = e^{-t} \sin t$
(C) $f(t) = e^{-t}$ (D) $f(t) = 1 - e^{-t}$

Q.30 A box contains 4 red balls and 6 black balls. Three balls are selected randomly from the box one after another, without replacement. The probability that the selected set contains one red ball and two black balls is

(A) 1/20 (B) 1/12 (C) 3/10 (D) 1/2

Q.31 The state of stress at a point under plane stress condition is

$$\sigma_{xx} = 40\ MPa,\ \sigma_{yy} = 100\ MPa \text{ and } \tau_{xy} = 40\ MPa.$$

The radius of the Mohr's circle representing the given state of stress in *MPa* is

(A) 40 (B) 50 (C) 60 (D) 100

www.admission.aglasem.com

AglaSem Admission

Q.32 A force of 400 *N* is applied to the brake drum of 0.5 *m* diameter in a band-brake system as shown in the figure, where the wrapping angle is 180°. If the coefficient of friction between the drum and the band is 0.25, the braking torque applied, in *N.m* is

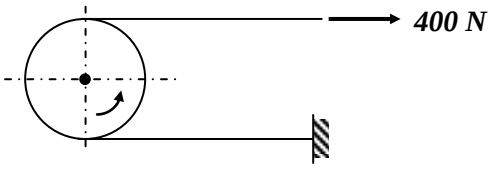

(A) 100.6 (B) 54.4 (C) 22.1 (D) 15.7

Q.33 Water (C_p = 4.18 *kJ/kg.K*) at 80°*C* enters a counterflow heat exchanger with a mass flow rate of 0.5 *kg/s*. Air (C_p = 1 *kJ/kg.K*) enters at 30°*C* with a mass flow rate of 2.09 *kg/s*. If the effectiveness of the heat exchanger is 0.8, the LMTD (in °*C*) is

(A) 40 (B) 20 (C) 10 (D) 5

Q.34 Consider two infinitely long *thin* concentric tubes of circular cross section as shown in the figure. If D_1 and D_2 are the diameters of the inner and outer tubes respectively, then the view factor F_{22} is given by

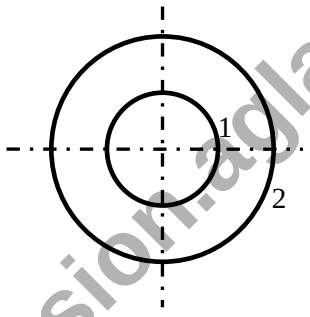

(A) $\left(\frac{D_2}{D_1}\right)-1$ (B) zero (C) $\left(\frac{D_1}{D_2}\right)$ (D) $1-\left(\frac{D_1}{D_2}\right)$

Q.35 A large tank with a nozzle attached contains three immiscible, inviscid fluids as shown. Assuming that the changes in h_1, h_2 and h_3 are negligible, the instantaneous discharge velocity is

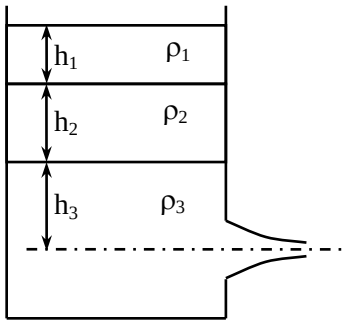

(A) $\sqrt{2gh_3\left(1+\frac{\rho_1}{\rho_3}\frac{h_1}{h_3}+\frac{\rho_2}{\rho_3}\frac{h_2}{h_3}\right)}$ (B) $\sqrt{2g\left(h_1+h_2+h_3\right)}$

(C) $\sqrt{2g\left(\frac{\rho_1h_1+\rho_2h_2+\rho_3h_3}{\rho_1+\rho_2+\rho_3}\right)}$ (D) $\sqrt{2g\left(\frac{\rho_1h_2h_3+\rho_2h_3h_1+\rho_3h_1h_2}{\rho_1h_1+\rho_2h_2+\rho_3h_3}\right)}$

www.admission.aglasem.com

AglaSem Admission

Q.36 In a DC arc welding operation, the voltage-arc length characteristic was obtained as $V_{arc} = 20 + 5l$ where the arc length l was varied between 5 *mm* and 7 *mm*. Here V_{arc} denotes the arc voltage in *Volts*. The *arc current* was varied from 400 *A* to 500 *A*. Assuming linear power source characteristic, the *open circuit voltage* and the *short circuit current* for the welding operation are

(A) 45 *V*, 450 *A* (B) 75 *V*, 750 *A* (C) 95 *V*, 950 *A* (D) 150 *V*, 1500 *A*

Q.37 In a single pass rolling process using 410 *mm* diameter steel rollers, a strip of width 140 *mm* and thickness 8 *mm* undergoes 10 % reduction of thickness. The *angle of bite* in *radians* is

(A) 0.006 (B) 0.031 (C) 0.062 (D) 0.600

Q.38 A mould having dimensions 100 *mm* × 90 *mm* × 20 *mm* is filled with molten metal through a gate as shown in the figure. For height *h* and cross-sectional area *A*, the mould filling time is t_1. The height is now quadrupled and the cross-sectional area is halved. The corresponding filling time is t_2. The ratio t_2/t_1 is

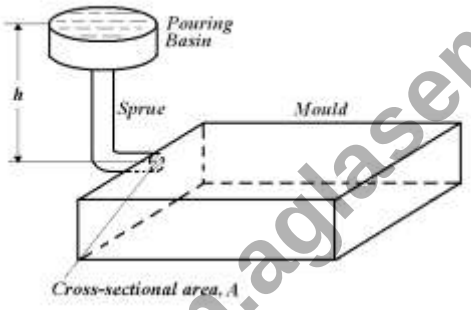

(A) $\frac{1}{\sqrt{2}}$ (B) 1 (C) $\sqrt{2}$ (D) 2

Q.39 A thin square plate *ABCD* with side of unit length is kept in the *X*-*Y* plane as shown in the figure. The plate is first rotated by 30° in the anti clockwise direction about the *Z*-axis with *A* fixed at the origin. The plate is then rotated by 90° in the anti clockwise direction about the *X*-axis with *A* fixed at the origin. The final co-ordinates of *C* are

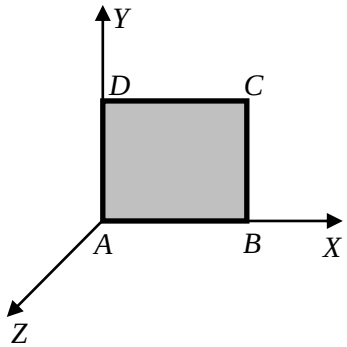

(A) (1.366, 0.366, 0.0) (B) (0.0, 1.366, 0.366)

(C) (1.366, 0.0, 0.366) (D) (0.366, 0.0, 1.366)

Q.40 A sine bar has a length of 250 *mm*. Each roller has a diameter of 20 *mm*. During taper angle measurement of a component, the height from the surface plate to the centre of a roller is 100 *mm*. The calculated taper angle (in *degrees*) is

(A) 21.1 (B) 22.8 (C) 23.6 (D) 68.9

www.admission.aglasem.com

AglaSem Admission

Q.41 Match the following plastic products with their most appropriate materials.

	Products		**Materials**
1.	Gears	P.	Polymethylmethacrylate (PMMA)
2.	Helmets	Q.	Polyamides (PA)
3.	Lenses	R.	Polyethylene (PE)
4.	Food packaging	S.	Acrylonitrile-butadiene-styrene (ABS)

(A) 1-Q, 2-R, 3-S, 4-P
(B) 1-S, 2-P, 3-Q, 4-R
(C) 1-P, 2-Q, 3-R, 4-S
(D) 1-Q, 2-S, 3-P, 4-R

Q.42 In a shaping process, the number of double strokes per minute is 30 and the quick return ratio is 0.6. If the length of the stroke is 250 *mm*, the average cutting velocity in *m/min* is

(A) 3.0 (B) 4.5 (C) 7.5 (D) 12.0

Q.43 For a linear programming problem, the set of constraints $x+y \leq 2$, $3x+5y \geq 15$, $x \geq 0$ and $y \geq 0$ leads to

(A) an infeasible solution.
(B) a unique optimal solution.
(C) multiple but finite optimal solutions.
(D) infinite optimal solutions.

Q.44 A milk vendor incurs an overstocking cost of *Rs.* 2 per *litre* and a shortage cost of *Rs.* 0.5 per *litre*. The demand is uniformly distributed between 1 *litre* and 6 *litres*. Using the *Newsvendor Model*, the maximum quantity of milk in *litre*(*s*) the vendor should order is

(A) 2 (B) 6 (C) 1 (D) 3

Q.45 The specification limits for the weight of a product are 13.1 *kg* and 15 *kg*. If the process has a variance of weight 0.05 kg^2, then the process capability index is

(A) 6.3 (B) 1.9 (C) 1.4 (D) 8.6

Q.46 On an average, there are 30 customers in a queue. If the arrival rate of customers into the system is 16 customers per hour and on average 32 customers leave the system per hour, then the average number of customers in the system is

(A) 16.5 (B) 30.5 (C) 32.0 (D) 46.0

Q.47 Data for four jobs that need to be processed on a single machine are given below.

Job	P	Q	R	S
Processing time (days)	12	9	21	10
Due date (days)	20	40	30	19

All the four jobs are available at time zero. If the jobs are scheduled using the *Earliest Due Date* (EDD) algorithm, then the job with maximum tardiness is

(A) P (B) Q (C) R (D) S

www.admission.aglasem.com

AglaSem Admission

Common Data Questions

Common Data for Questions 48 and 49:

Two steel truss members, AC and BC, each having cross sectional area of 100 mm^2, are subjected to a horizontal force **F** as shown in figure. All the joints are hinged.

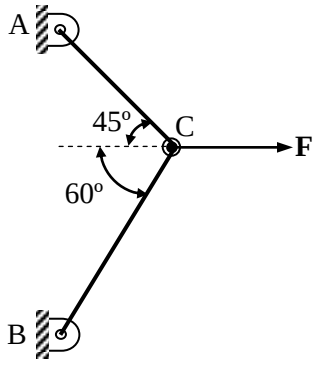

Q.48 The maximum force **F** in *kN* that can be applied at *C* such that the axial stress in any of the truss members DOES NOT exceed 100 *MPa* is

(A) 8.17 (B) 11.15 (C) 14.14 (D) 22.30

Q.49 If **F** = 1 *kN*, the magnitude of the vertical reaction force developed at the point B in *kN* is

(A) 0.63 (B) 0.32 (C) 1.26 (D) 1.46

Common Data for Questions 50 and 51:

Data for a plain milling operation are given below.

Length of workpiece	200 *mm*
Cutter diameter	100 *mm*
No. of teeth	4
Cutter speed	100 *rpm*
Feed	200 *mm/min*
Depth of cut	2 *mm*
Total clearance (entry and exit)	5 *mm*

Q.50 Mean undeformed chip thickness (in *microns*) is

(A) 142 (B) 100 (C) 71 (D) 50

Q.51 Machining time for a single pass (in *seconds*) is

(A) 60 (B) 66 (C) 126 (D) 150

www.admission.aglasem.com

AglaSem Admission

Linked Answer Questions

Statement for Linked Answer Questions 52 and 53:

In an EDM process using RC relaxation circuit, a 12 *mm* diameter through hole is made in a steel plate of 50 *mm* thickness using a graphite tool and kerosene as dielectric. Assume discharge time to be negligible. Machining is carried out under the following conditions:

Resistance	40 Ω
Capacitance	20 μF
Supply voltage	220 V
Discharge voltage	110 V

Q.52 The time for one cycle, in *milliseconds*, is

(A) 0.55 (B) 0.32 (C) 0.89 (D) 0.24

Q.53 Average power input (in *kW*) is

(A) 0.373 (B) 0.137 (C) 0.218 (D) 0.500

Statement for Linked Answer Questions 54 and 55:

In a particular year, an organization earns cash revenues of *Rs.* 2,00,000. Total material and labour expenses are *Rs.* 1,09,000. The depreciation claimed on the equipment is *Rs.* 25,000. The tax rate is 20%.

Q.54 The profit after tax (PAT) is

(A) *Rs.* 92,800 (B) *Rs.* 66,200 (C) *Rs.* 72,800 (D) *Rs.* 52,800

Q.55 The net cash flow is

(A) *Rs.* 97,800 (B) *Rs.* 77,800 (C) *Rs.* 66,000 (D) *Rs.* 72,800

www.admission.aglasem.com

AglaSem Admission

General Aptitude (GA) Questions

Q. 56 – Q. 60 carry one mark each.

Q.56 Choose the most appropriate alternative from the options given below to complete the following sentence:

Suresh's dog is the one _____ was hurt in the stampede.

(A) that (B) which (C) who (D) whom

Q.57 Choose the most appropriate alternative from the options given below to complete the following sentence:

Despite several _____ the mission succeeded in its attempt to resolve the conflict.

(A) attempts (B) setbacks (C) meetings (D) delegations

Q.58 Choose the grammatically **INCORRECT** sentence:

(A) They gave us the money back less the service charges of Three Hundred rupees.
(B) This country's expenditure is not less than that of Bangladesh.
(C) The committee initially asked for a funding of Fifty Lakh rupees, but later settled for a lesser sum.
(D) This country's expenditure on educational reforms is very less.

Q.59 The cost function for a product in a firm is given by $5q^2$, where q is the amount of production. The firm can sell the product at a market price of ₹ 50 per unit. The number of units to be produced by the firm such that the profit is maximized is

(A) 5 (B) 10 (C) 15 (D) 25

Q.60 Which one of the following options is the closest in meaning to the word given below?

Mitigate

(A) Diminish (B) Divulge (C) Dedicate (D) Denote

Q. 61 - Q. 65 carry two marks each.

Q.61 Given the sequence of terms, AD CG FK JP, the next term is

(A) OV (B) OW (C) PV (D) PW

Q.62 A political party orders an arch for the entrance to the ground in which the annual convention is being held. The profile of the arch follows the equation $y = 2x - 0.1x^2$ where y is the height of the arch in meters. The maximum possible height of the arch is

(A) 8 meters (B) 10 meters (C) 12 meters (D) 14 meters

www.admission.aglasem.com

AglaSem Admission

Q.63 Which of the following assertions are **CORRECT**?

P: Adding 7 to each entry in a list adds 7 to the mean of the list
Q: Adding 7 to each entry in a list adds 7 to the standard deviation of the list
R: Doubling each entry in a list doubles the mean of the list
S: Doubling each entry in a list leaves the standard deviation of the list unchanged

(A) P, Q (B) Q, R (C) P, R (D) R, S

Q.64 **Wanted Temporary, Part-time persons for the post of Field Interviewer to conduct personal interviews to collect and collate economic data. Requirements: High School-pass, must be available for Day, Evening and Saturday work. Transportation paid, expenses reimbursed.**

Which one of the following is the best inference from the above advertisement?

(A) Gender-discriminatory
(B) Xenophobic
(C) Not designed to make the post attractive
(D) Not gender-discriminatory

Q.65 An automobile plant contracted to buy shock absorbers from two suppliers X and Y. X supplies 60% and Y supplies 40% of the shock absorbers. All shock absorbers are subjected to a quality test. The ones that pass the quality test are considered reliable. Of X's shock absorbers, 96% are reliable. Of Y's shock absorbers, 72% are reliable.

The probability that a randomly chosen shock absorber, which is found to be reliable, is made by Y is

(A) 0.288 (B) 0.334 (C) 0.667 (D) 0.720

END OF THE QUESTION PAPER

www.admission.aglasem.com

AglaSem Admission

Space for Rough Work

www.admission.aglasem.com

AglaSem Admission

Space for Rough Work

www.admission.aglasem.com

AglaSem Admission

Space for Rough Work

www.admission.aglasem.com