RD Sharma Solutions

Class 7

aglasem.com

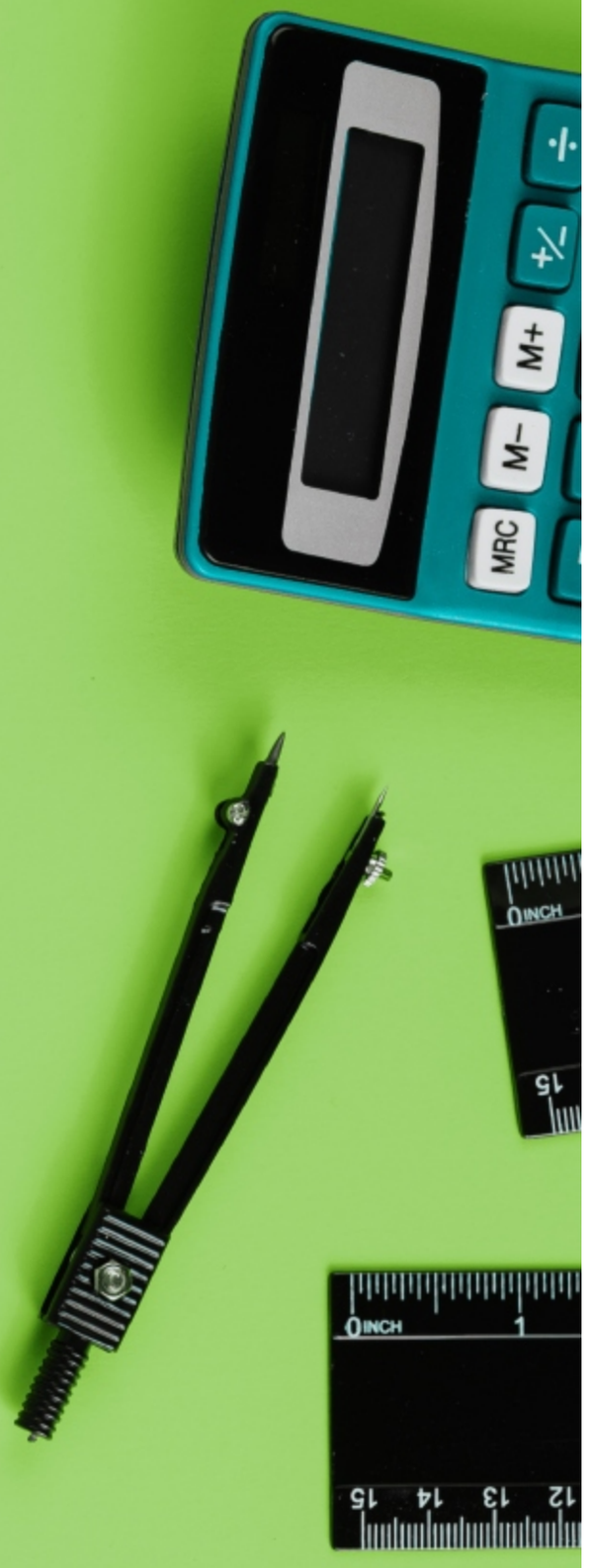

Exercise 20.2

Q1 A rectangular grassy lawn measuring 40 m by 25 m is to be surrounded externally by a path which is 2 m wide. Calculate the cost of levelling the path at the rate of Rs. 8.25 per square metre.

Solution:

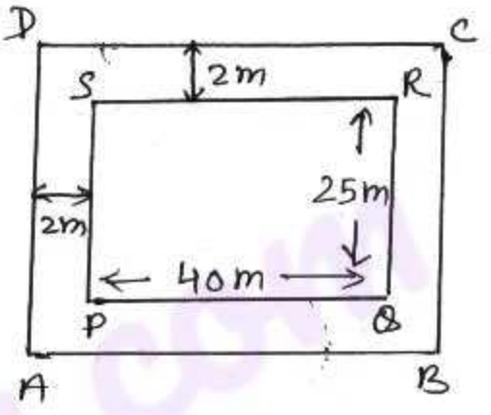

Let PQRS be the park, whose

length = 40m

breadth = 25m

breadth of path = 2m

length of outer rectangle ABCD = 40 + 2 + 2 = 44m

breadth = 25 + 2 + 2 = 29 m

Then

Area of path = Area of rectangle ABCD − Ar of rectangle PQRS

$= \{(44 \times 29) - (40 \times 25)\} m^2$

$= (1276 - 1000) m^2 = 276 m^2$

Rate of levelling the path = Rs 8.25 per m^2

Cost of levelling the path = (8.25×276)

= Rs 2277

aglasem.com

docs.aglasem.com

Q.2 One metre wide path is built inside a square park of side 30 m along its sides. The remaining part of the park is covered by grass. If the total cost of covering by grass is Rs 1176, find the rate per square metre at which the park is covered by the grass.

Solution:

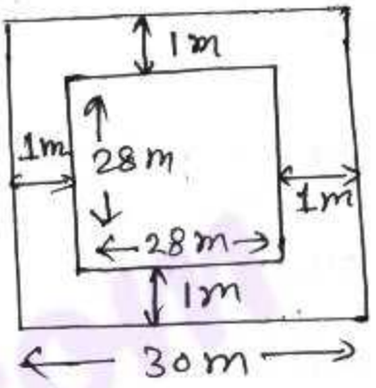

length of side of outer square
$= 30m$

width of path $= 1m$

length of side of inner square
$= 30-(1+1) = 30-2 = 28\ m$

Area of grass = Area of Inner square
$= (28)^2 = 784\ m^2$

Total cost of covering the park with grass
= Area of park covering with grass × Rate per square metre

$\Rightarrow 1176 = 784 \times \text{Rate}$

$\Rightarrow \text{Rate} = \dfrac{1176}{784} = \text{Rs } 1.50 \text{ per } m^2$

Q.3 Through a rectangular field of sides 90 m × 60 m, two roads are constructed which are parallel to the sides and cut each other at right angles through the centre of the field. If the width of the roads is

docs.aglasem.com
aglasem.com

3 m, find the total area covered by the two roads.

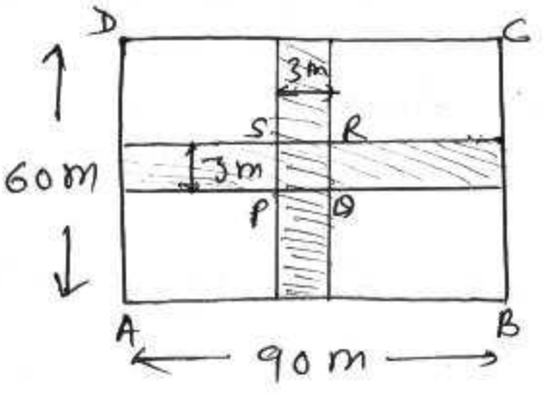

Solution

length of rectangular field = 90m

breadth = 60m

Area of road parallel to length = $90 \times 3\ m^2 = 270\ m^2$

Area of road parallel to breadth = $60 \times 3\ m^2 = 180\ m^2$

there area of PQRS is common to both

Area of PQRS = $(3)^2 = 9\ m^2$

∴ Area of roads = $270 + 180 - 9$

$= 441\ m^2$

Q4 From a rectangular sheet of tin, of size 100 cm by 80 cm, are cut four squares of side 10 cm from each corner. Find the area of the remaining sheet.

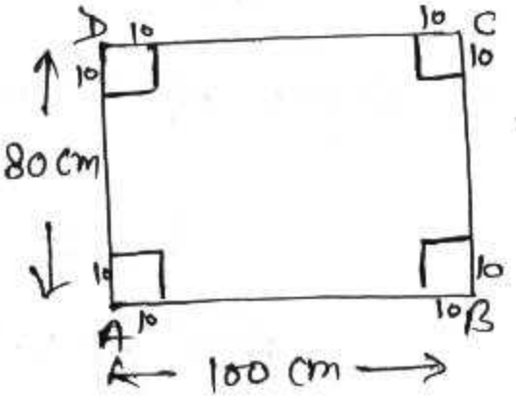

Solution: length of rectangular sheet = 100 cm

breadth = 80 cm

∴ Area of sheet = $l \times b$

$= 100 \times 80 = 8000\ cm^2$

docs.aglasem.com

aglasem.com

Side of squared corner = 10 cm

Area of one square corner $= (10)^2 = 100\ cm^2$

$\therefore$ Area of 4 squared corner $= 4 \times 100\ cm^2$
$= 400\ cm^2$

hence, Area of remaining sheet $= 8000 - 400$
$= 7600\ cm^2$

Q.5 A painting 8 cm long and 5 cm wide is painted on a card board such that there is a margin of 1.5 cm along each of its sides. Find the total area of the margin.

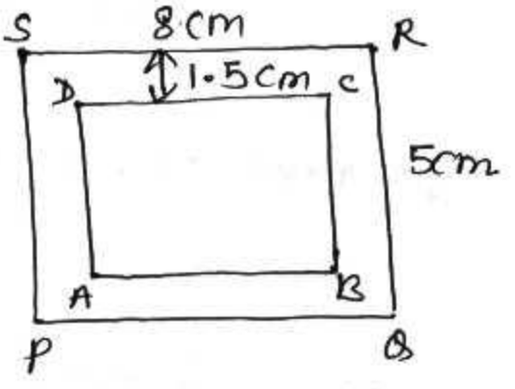

Solution:

length of card board PQRS = 8 cm
breadth = 5 cm

Area of card board $= 8 \times 5\ cm^2$
$= 40\ cm^2$

width of margin = 1.5 cm

$\therefore$ length of painted portion $= 8 - (1.5 + 1.5)$
$= 8 - 3 = 5\ cm$

breadth $= 5 - (1.5 + 1.5) = 5 - 3 = 2\ cm$

Area of painting $= 5 \times 2\ cm^2 = 10\ cm^2$

$\therefore$ Total Area of margin $= 40\ cm^2 - 10\ cm^2 = 30\ cm^2$

docs.aglasem.com
aglasem.com

Q.6 Rakesh has a rectangular field of length 80 m and breadth 60 m. In it, he wants to make a garden 10 m long and 4 m broad at one of the corners and at another corner, he wants to grow flowers in two flower beds each of size 4 m by 1.5 m. In the remaining part of the field, he wants to apply manure. Find the cost of applying the manures at the rate of Rs. 300 per are.

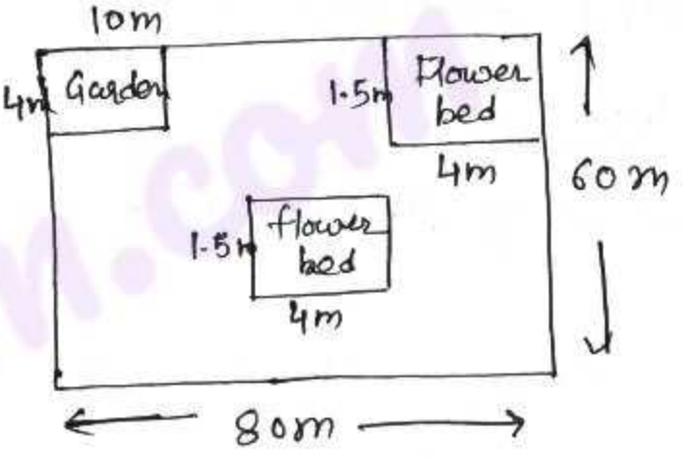

Solution:

here

Area of rectangular field

$= 80\,m \times 60\,m$

$= 4800\,m^2$

Area of garden $= 10\,m \times 4\,m = 40\,m^2$

Area of one flower bed $= 1.5\,m \times 4\,m = 6\,m^2$

$\therefore$ Area of two flower beds $= 2 \times 6 = 12\,m^2$

here

Area of field for applying manure

= Area of field − (Area of Garden + area of two flour beds)

$= 4800 - (40 + 12)$

$= 4800 - 52 = 4748\,m^2$

docs.aglasem.com

aglasem.com

$\because$ $100\ m^2 = 1$ are

$\therefore$ $4748\ m^2 = 47.48$ ares.

So, Total cost of applying manure $= 300 \times 47.48$

$= Rs.\ 14244$

Q.7 Each side of a square flower bed is 2m 80cm long. It is extended by digging a strip 30 cm wide all around it. Find the area of enlarged flower bed and also the increase in the area of flower bed.

Solution:

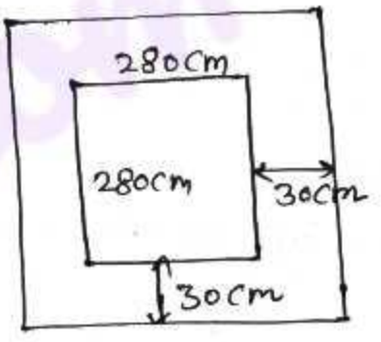

Side of flower bed $= 2m\ 80cm$

$= 2.80m$

Area of flower bed $= (\text{side})^2$

$= (2.80)^2\ m^2$

$= 7.84\ m^2$

Side of flower bed with strip $= 2.80 + 0.3 + 0.3$

$= 3.4\ m.$

Area of enlarged flower bed $= (3.4)^2 = 11.56\ m^2$

Thus increase in the area of flower bed

$= 11.56\ m^2 - 7.84\ m^2$

$= 3.72\ m^2$

docs.aglasem.com

aglasem.com

Q8 A room 5m long and 4m wide is surrounded by a verandah. If the verandah occupies an area of $22 m^2$, find the width of the varandah.

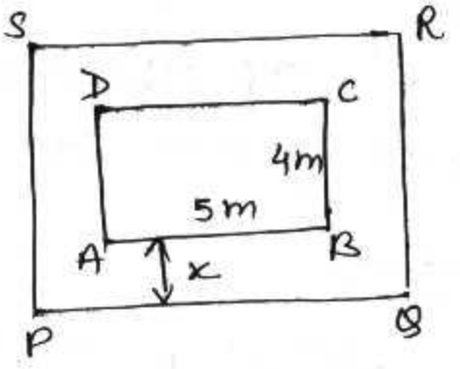

Solution:

length of room = 5m

breadth = 4m

∴ Area of room = 5m × 4m

= $20 m^2$

let width of verandah = x m

then length PQ = (5+x+x) = (5+2x) m

breadth QR = (4+x+x) = (4+2x) m

Then area of PQRS = (5+2x)(4+2x)

= $(4x^2+18x+20)\ m^2$

Now, Area of verandah = Area (PQRS) − Area (ABCD)

$22 = 4x^2+18x+20-20$

$\Rightarrow 22 = 4x^2+18x$

Dividing by 2.

$\Rightarrow 11 = 2x^2+9x$

$\Rightarrow 2x^2+9x-11=0$

$\Rightarrow 2x^2+11x-2x-11=0$

$\Rightarrow x(2x+11)-1(2x+11)=0$

$\Rightarrow (x-1)(2x+11)=0$

$\Rightarrow x=1,\ x=\frac{-11}{2}$

docs.aglasem.com

aglasem.com

$\because$ the width can not be negative.

So, width of the verandah = 1 m.

Q9 A square lawn has a 2m wide path surrounding it. If the area of the path is 136 m^2, find the area of the lawn.

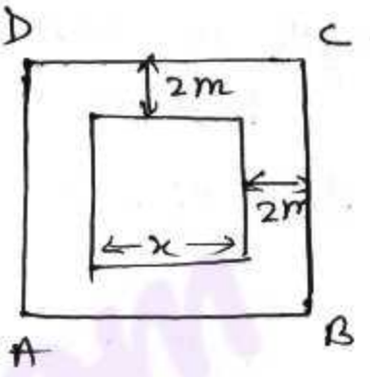

Solution :

Let side of lawn = x m

Side of outer square = (x+4) m.

Area of path = Area of outer square − Area of Inner square

$\Rightarrow \quad 136 = (x+4)^2 - x^2$

$\Rightarrow \quad 136 = x^2 + 8x + 16 - x^2$

$\Rightarrow \quad 136 = 8x + 16$

$\Rightarrow \quad 8x = 136 - 16 = 120$ m

$\Rightarrow \quad x = \frac{120}{8} = 15$ m

$\therefore$ side of lawn = 15 m

hence Area of lawn = $(15)^2 = 225\ m^2$

Q.10 A poster of size 10 cm by 8 cm is pasted on a sheet of cardboard such that there is a margin of width 1.75 cm along each side of the poster. Find

docs.aglasem.com

aglasem.com

(i) The total area of the margin

(ii) The cost of the card board used at the rate of Rs 0.60 per cm^2.

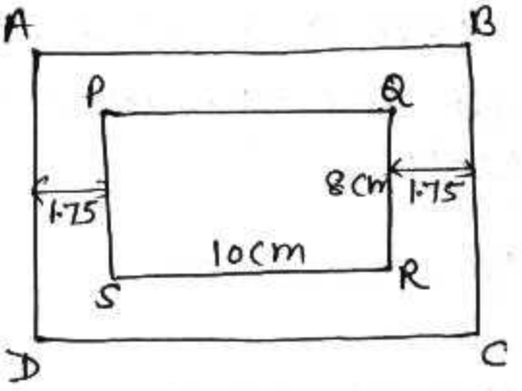

Solution :

length of poster = 10cm

breadth = 8 cm

∴ Area of poster = 10cm × 8cm

= 80 cm^2

length of card board = 10 cm + 1.75 cm + 1.75 cm

= 13.5 cm

breadth = 8 cm + 1.75 cm + 1.75 cm

= 11.5 cm

Area of card board = $l \times b$

= 13.5 cm × 11.5 cm = 155.25 cm^2

(i) Area of Margin = Area of card board − Area of poster

= (155.25 − 80) cm^2 = 75.25 cm^2

(ii) Rate of card board = Rs 0.60 per cm^2

∴ Total cost = 155.25 × 0.60

= Rs. 93.15

aglasem.com

docs.aglasem.com

Q.11 A rectangular field is 50 m by 40 m. It has two roads through its centre, running parallel to its sides. The width of the longer and shorter roads are 1.8 m and 2.5 m respectively. Find the area of the roads and the area of the remaining portion of the field.

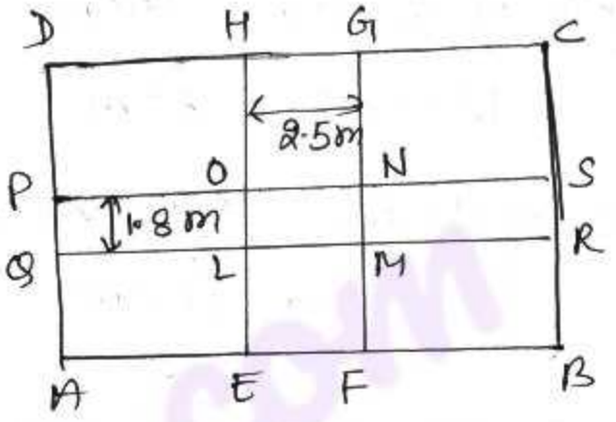

Solution :-

length of rectangular field = 50m

breadth = 40m

Area of rectangular field = 50m × 40m = 2000 m^2

width of road PQRS = 1.8 m

length = 50 m

Area of road PQRS = 50 × 1.8 = 90 m^2

width of road EFGH = 2.5 m

length = 40 m

Area of road = 40m × 2.5 m = 100 m^2

Area of LMNO = 2.5 m × 1.8 m = 4.5 m^2

Hence Area of roads = Area of PQRS + Area of EFGH − Area of LMNO

= (100 + 90 − 4.5) m^2

= 185.5 m^2

docs.aglasem.com

aglasem.com

∴ Area of remaining portion = Area of rectangular field − Ar of roads

$= (2000 - 185.5)\ m^2 = 1814.5\ m^2$

Q.12 There is a rectangular field of size 94m×32

Three roads each of 2m width pass through the field such that two roads are parallel to the breadth of the field and the third is parallel to the length. Calculate

(i) Area of the field covered by three roads

(ii) area of field not covered by roads.

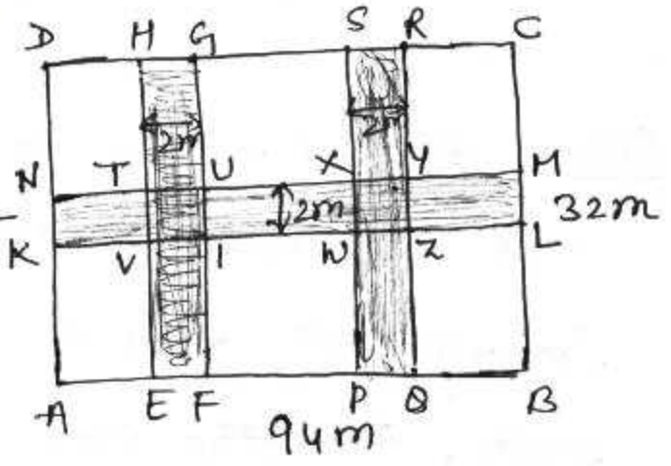

Solution:

Let ABCD be the rectangular field.

length = 94m

breadth = 32m.

Area of ABCD = $l \times b = 94m \times 32m$

$= 3008\ m^2$

Area of road KLMN = $94 \times 2 = 188\ m^2$

Area of road EFGH = $32 \times 2 = 64\ m^2$

Area of road PQRS = $32 \times 2 = 64\ m^2$

docs.aglasem.com

aglasem.com