The Graduate Aptitude Test in Engineering

GATE 2023 Question Paper

GATE is an entrance examination conducted in India that primarily tests the comprehensive understanding of undergraduate subjects in engineering and sciences for admission into technical postgraduate programs.

download pdf at:
aglasem.com

General Aptitude (GA)

Q.1 – Q.5 Carry ONE mark Each

Q.1	The village was nestled in a green spot, _____ the ocean and the hills.
(A)	through
(B)	in
(C)	at
(D)	between

Q.2	Disagree : Protest : : Agree : _____ (By word meaning)
(A)	Refuse
(B)	Pretext
(C)	Recommend
(D)	Refute

Organizing Institute: IIT Kanpur

admission.aglasem.com

aglasem.com

Q.3	A ‘frabjous’ number is defined as a 3 digit number with all digits odd, and no two adjacent digits being the same. For example, 137 is a frabjous number, while 133 is not. How many such frabjous numbers exist?
(A)	125
(B)	720
(C)	60
(D)	80

Q.4	Which one among the following statements must be TRUE about the mean and the median of the scores of all candidates appearing for GATE 2023?
(A)	The median is at least as large as the mean.
(B)	The mean is at least as large as the median.
(C)	At most half the candidates have a score that is larger than the median.
(D)	At most half the candidates have a score that is larger than the mean.

admission.aglasem.com

aglasem.com

Q.5	In the given diagram, ovals are marked at different heights (*h*) of a hill. Which one of the following options **P**, **Q**, **R**, and **S** depicts the top view of the hill?

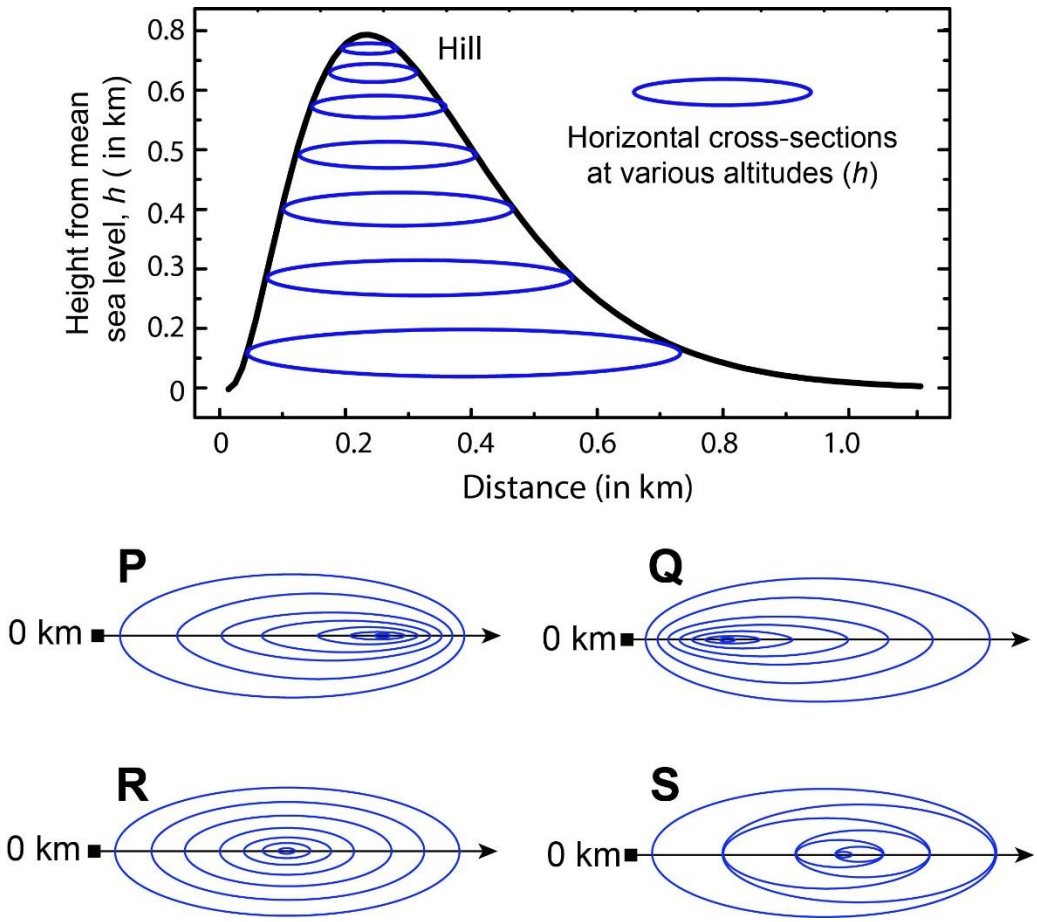

(A)	**P**
(B)	**Q**
(C)	**R**
(D)	**S**

Organizing Institute: IIT Kanpur

admission.aglasem.com

aglasem.com

Q.6 – Q.10 Carry TWO marks Each

Q.6	Residency is a famous housing complex with many well-established individuals among its residents. A recent survey conducted among the residents of the complex revealed that all of those residents who are well established in their respective fields happen to be academicians. The survey also revealed that most of these academicians are authors of some best-selling books. Based only on the information provided above, which one of the following statements can be logically inferred with *certainty*?
(A)	Some residents of the complex who are well established in their fields are also authors of some best-selling books.
(B)	All academicians residing in the complex are well established in their fields.
(C)	Some authors of best-selling books are residents of the complex who are well established in their fields.
(D)	Some academicians residing in the complex are well established in their fields.

admission.aglasem.com

aglasem.com

Q.7	Ankita has to climb 5 stairs starting at the ground, while respecting the following rules: 1. At any stage, Ankita can move either one or two stairs up. 2. At any stage, Ankita cannot move to a lower step. Let $F(N)$ denote the number of possible ways in which Ankita can reach the Nth stair. For example, $F(1) = 1,\ F(2) = 2,\ F(3) = 3$. The value of $F(5)$ is _____.
(A)	8
(B)	7
(C)	6
(D)	5

Organizing Institute: IIT Kanpur

admission.aglasem.com

aglasem.com

Q.8	The information contained in DNA is used to synthesize proteins that are necessary for the functioning of life. DNA is composed of four nucleotides: Adenine (A), Thymine (T), Cytosine (C), and Guanine (G). The information contained in DNA can then be thought of as a sequence of these four nucleotides: A, T, C, and G. DNA has coding and non-coding regions. Coding regions—where the sequence of these nucleotides are read in groups of three to produce individual amino acids—constitute only about 2% of human DNA. For example, the triplet of nucleotides CCG codes for the amino acid glycine, while the triplet GGA codes for the amino acid proline. Multiple amino acids are then assembled to form a protein. Based only on the information provided above, which of the following statements can be logically inferred with *certainty*? (i) The majority of human DNA has no role in the synthesis of proteins. (ii) The function of about 98% of human DNA is not understood.
(A)	only (i)
(B)	only (ii)
(C)	both (i) and (ii)
(D)	neither (i) nor (ii)

admission.aglasem.com

aglasem.com

Q.9	Which one of the given figures P, Q, R and S represents the graph of the following function? $$f(x) = \|\,|x+2| - |x-1|\,\|$$
	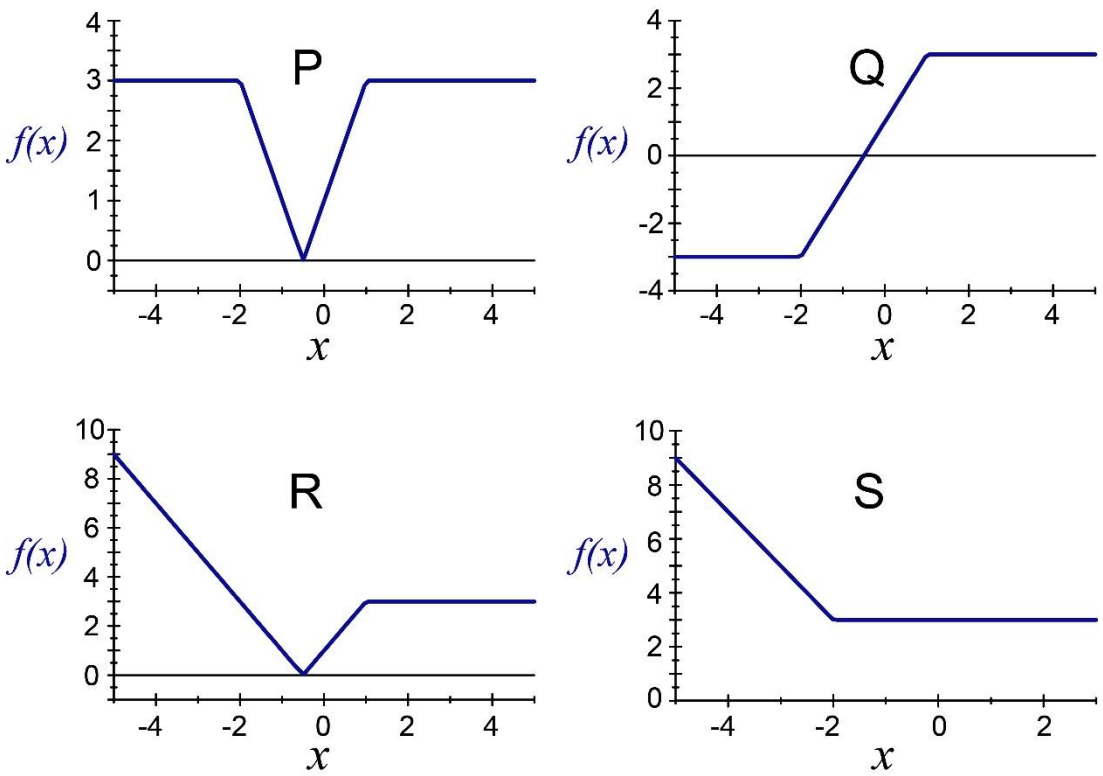
(A)	P
(B)	Q
(C)	R
(D)	S

Organizing Institute: IIT Kanpur

admission.aglasem.com

aglasem.com

Q.10	An opaque cylinder (shown below) is suspended in the path of a parallel beam of light, such that its shadow is cast on a screen oriented perpendicular to the direction of the light beam. The cylinder can be reoriented in any direction within the light beam. Under these conditions, which one of the shadows **P**, **Q**, **R**, and **S** is NOT possible?
	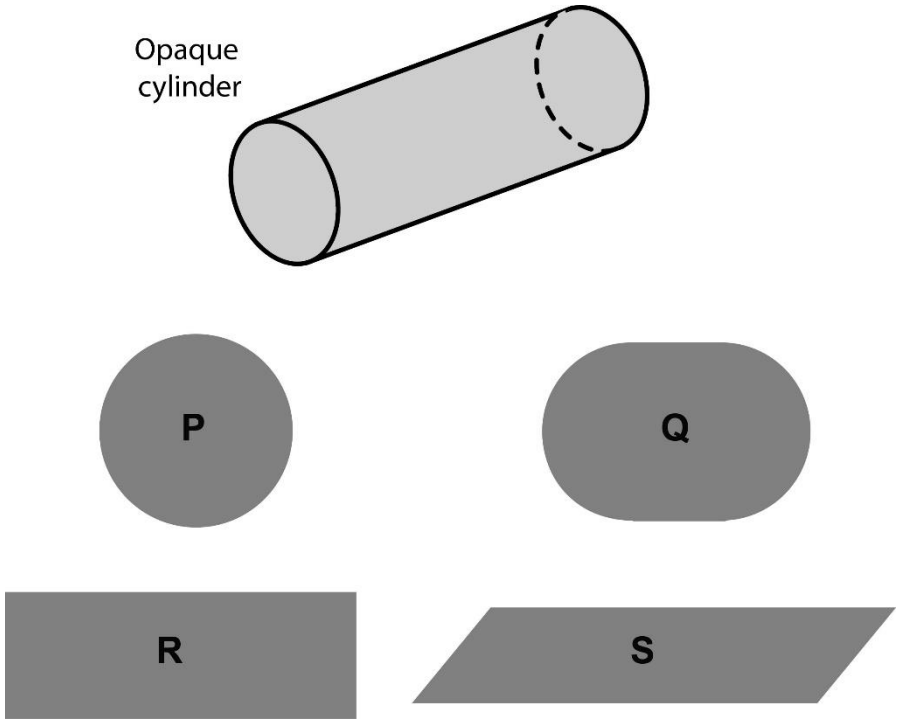
(A)	**P**
(B)	**Q**
(C)	**R**
(D)	**S**

admission.aglasem.com

aglasem.com

Q.11 – Q.35 Carry ONE mark Each

Q.11	Choose solution set S corresponding to the systems of two equations $x - 2y + z = 0$ $x - z = 0$ **Note**: $\Re$ denotes the set of real numbers
(A)	$S = \left\{ \alpha \begin{pmatrix} 1 \\ 1 \\ 1 \end{pmatrix} \middle\vert \alpha \in \Re \right\}$
(B)	$S = \left\{ \alpha \begin{pmatrix} 1 \\ 1 \\ 1 \end{pmatrix} + \beta \begin{pmatrix} 1 \\ 0 \\ 1 \end{pmatrix} \middle\vert \alpha, \beta \in \Re \right\}$
(C)	$S = \left\{ \alpha \begin{pmatrix} 1 \\ 1 \\ 1 \end{pmatrix} + \beta \begin{pmatrix} 2 \\ 1 \\ 2 \end{pmatrix} \middle\vert \alpha, \beta \in \Re \right\}$
(D)	$S = \left\{ \alpha \begin{pmatrix} 1 \\ 0 \\ 1 \end{pmatrix} \middle\vert \alpha \in \Re \right\}$

admission.aglasem.com

aglasem.com

Q.12	Inductance of a coil is measured as 10 mH, using an LCR meter, when no other objects are present near the coil. The LCR meter uses a sinusoidal excitation at 10 kHz. If a pure copper sheet is brought near the coil, the same LCR meter will read_____.
(A)	less than 10 mH
(B)	10 mH
(C)	more than 10 mH
(D)	less than 10 mH initially and then stabilizes to more than 10 mH
Q.13	Which of the following flow meters offers the lowest resistance to the flow?
(A)	Turbine flow meter
(B)	Orifice flow meter*
(C)	Venturi meter
(D)	Electromagnetic flow meter

Organizing Institute: IIT Kanpur

admission.aglasem.com

aglasem.com

Q.14	Pair the quantities (p) to (s) with the measuring devices (i) to (iv).

(i) Linear Variable Differential Transformer (LVDT)	(p) Torque
(ii) Thermistor	(q) Pressure
(iii) Strain gauge	(r) Linear position
(iv) Diaphragm	(s) Temperature

(A)	(i) - (r), (ii) - (s), (iii) - (q), (iv) - (p)
(B)	(i) - (p), (ii) - (s), (iii) - (r), (iv) - (q)
(C)	(i) - (r), (ii) - (s), (iii) - (p), (iv) - (q)
(D)	(i) - (q), (ii) - (s), (iii) - (p), (iv) - (r)

Organizing Institute: IIT Kanpur

admission.aglasem.com

aglasem.com

Q.15	Capacitance 'C' of a parallel plate structure is calculated as 20 pF using $C = \frac{\varepsilon_o \varepsilon_r A}{d}$, where ε_o is the permittivity of free space, ε_r is the relative permittivity of the dielectric, A is the overlapping area of the electrodes and d is the distance between them. The value of C is then measured using an LCR meter. If the meter is assumed to be ideal and it introduces no error due to cable capacitance, which one of the following readings is likely to be correct?
(A)	20.5 pF
(B)	20 pF
(C)	19.5 pF
(D)	10 pF

admission.aglasem.com

aglasem.com

Q.16	The table shows the present state Q(t), next state Q(t+1), and the control input in a flip-flop. Identify the flip-flop.

Q (t)	Q (t+1)	Input
0	0	0
0	1	1
1	0	1
1	1	0

(A)	T flip-flop
(B)	D flip-flop
(C)	SR flip-flop
(D)	JK flip-flop

admission.aglasem.com

aglasem.com

Q.17	Match the Exclusive-OR (XOR) operations (i) to (iv) with the results (p) to (s), where X is a Boolean input.

(i) $X \oplus X$	(p) 1
(ii) $X \oplus \bar{X}$	(q) 0
(iii) $X \oplus 0$	(r) $\bar{X}$
(iv) $X \oplus 1$	(s) X

(A)	(i) - (q), (ii) - (r), (iii) - (s), (iv) - (p)
(B)	(i) - (q), (ii) - (r), (iii) - (p), (iv) - (s)
(C)	(i) - (p), (ii) - (s), (iii) - (q), (iv) - (r)
(D)	(i) - (q), (ii) - (p), (iii) - (s), (iv) - (r)

admission.aglasem.com
aglasem.com

Q.18	A light emitting diode (LED) emits light when it is _____biased. A photodiode provides maximum sensitivity to light when it is_____ biased.
(A)	forward, forward
(B)	forward, reverse
(C)	reverse, reverse
(D)	reverse, forward
Q.19	$F(z) = \frac{1}{1-z}$, when expanded as a power series around $z = 2$, would result in $F(z) = \sum_{k=0}^{\infty} a_k (z-2)^k$, with the region of convergence (ROC) $\lvert z-2 \rvert < 1$. The coefficients a_k, $k \geq 0$, are given by the expression_____.
(A)	$(-1)^k$
(B)	$(-1)^{k+1}$
(C)	$\left(\frac{1}{2}\right)^k$
(D)	$\left(\frac{-1}{2}\right)^{k+1}$

admission.aglasem.com
aglasem.com

Q.20	The solution $x(t), t \geq 0$, to the differential equation $\ddot{x} = -k\dot{x}, k > 0$ with initial conditions $x(0) = 1$ and $\dot{x}(0) = 0$ is
(A)	$x(t) = 2e^{-kt} + 2kt - 1$
(B)	$x(t) = 2e^{-kt} - 1$
(C)	$x(t) = 1$
(D)	$x(t) = 2e^{-kt} - kt - 1$
Q.21	A system has the transfer-function $\frac{Y(s)}{X(s)} = \frac{s-\pi}{s+\pi}$ Let $u(t)$ be the unit-step function. The input $x(t)$ that results in a steady-state output $y(t) = \sin \pi t$ is _____.
(A)	$x(t) = \sin(\pi t)\ \ u(t)$
(B)	$x(t) = \sin\left(\pi t + \frac{\pi}{2}\right)\ \ u(t)$
(C)	$x(t) = \sin\left(\pi t - \frac{\pi}{2}\right)\ \ u(t)$
(D)	$x(t) = \cos\left(\pi t + \frac{\pi}{4}\right)\ u(t)$

admission.aglasem.com
aglasem.com

Q.22	Choose the fastest logic family among the following:
(A)	Transistor-Transistor Logic
(B)	Emitter-Coupled Logic
(C)	CMOS Logic
(D)	Resistor-Transistor Logic
Q.23	What is $\lim_{x \to 0} f(x)$, where $f(x) = x \sin \frac{1}{x}$?
(A)	0
(B)	1
(C)	∞
(D)	Limit does not exist
Q.24	The number of zeros of the polynomial $P(s) = s^3 + 2s^2 + 5s + 80$ in the right-half plane is _____.
Q.25	The number of times the Nyquist plot of $G(s)H(s) = \frac{1}{2}\frac{(s-1)(s-2)}{(s+1)(s+2)}$ encircles the origin is ____.

admission.aglasem.com
aglasem.com

Q.26	The opamp in the circuit shown is ideal, except that it has an input bias current of 1 nA and an input offset voltage of 10 μV. The resulting worst-case output voltage will be ±_____ μV (**rounded off to the nearest integer**).
	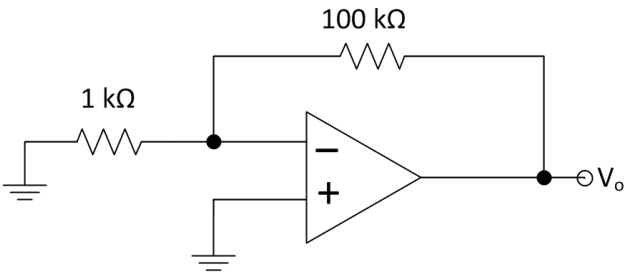
Q.27	The force per unit length between two infinitely long parallel conductors, with a gap of 2 cm between them is 10 μN/m. When the gap is doubled, the force per unit length will be _____ μN/m (**rounded off to one decimal place**).
Q.28	Consider the discrete-time signal $x[n] = u[-n+5] - u[n+3]$, where $u[n] = \begin{cases} 1; & n \geq 0 \\ 0; & n < 0 \end{cases}$. The smallest n for which $x[n] = 0$ is _____.
Q.29	Let $y(t) = x(4t)$, where $x(t)$ is a continuous-time periodic signal with fundamental period of 100 s. The fundamental period of $y(t)$ is _____ s (**rounded off to the nearest integer**).

admission.aglasem.com

aglasem.com

Q.30	When the bridge given below is balanced, the current through the resistor R_a is _____mA (**rounded off to two decimal places**).
	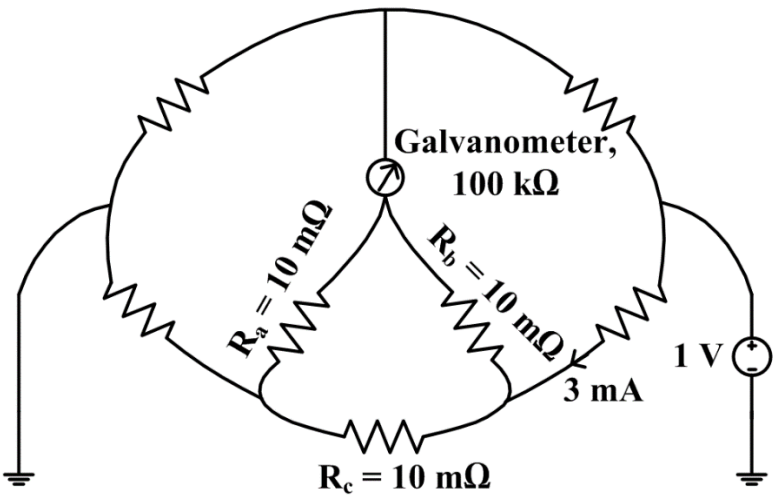
Q.31	In the circuit given, the Thevenin equivalent resistance R_{th} across the terminals 'a' and 'b' is _____Ω (**rounded off to one decimal place**).
	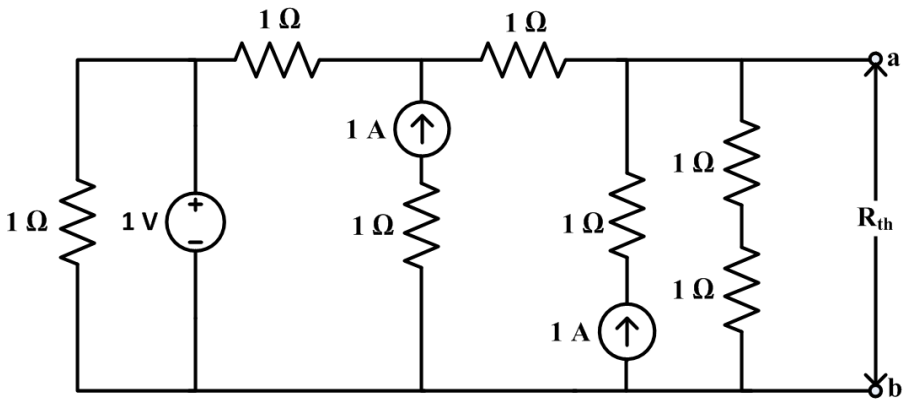

Organizing Institute: IIT Kanpur

admission.aglasem.com

aglasem.com

Q.32	X is a discrete random variable which takes values 0, 1 and 2. The probabilities are $P(X=0)=0.25$ and $P(X=1)=0.5$. With $E[.]$ denoting the expectation operator, the value of $E[X]-E[X^2]$ is _____(**rounded off to one decimal place**).
Q.33	The diode in the circuit is ideal. The current source $i_s(t) = \pi \sin(3000\pi\, t)$ mA. The magnitude of the average current flowing through the resistor R is _____mA (**rounded off to two decimal places**).
	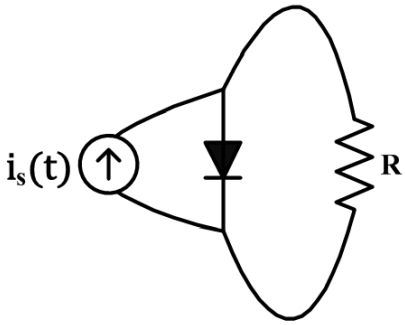
Q.34	The full-scale range of the wattmeter shown in the circuit is 100 W. The turns ratio of the individual transformers are indicated in the figure. The RMS value of the ac source voltage V_s is 200 V. The wattmeter reading will be _____W (**rounded off to the nearest integer**).
	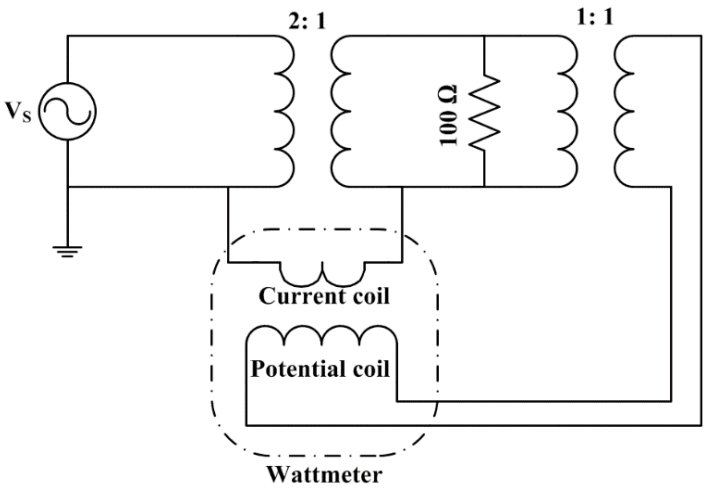

admission.aglasem.com

aglasem.com

Q.35	The no-load steady-state output voltage of a DC shunt generator is 200 V when it is driven in the clockwise direction at its rated speed. If the same machine is driven at the rated speed but in the opposite direction, the steady-state output voltage will be _____V (**rounded off to the nearest integer**).

admission.aglasem.com

aglasem.com

Q.36 – Q.65 Carry TWO marks Each

Q.36	The impulse response of an LTI system is $h(t) = \delta(t) + 0.5\,\delta(t-4)$, where $\delta(t)$ is the continuous-time unit impulse signal. If the input signal $x(t) = \cos\left(\frac{7\pi}{4}t\right)$, the output is _____.
(A)	$0.5\cos\left(\frac{7\pi}{4}t\right)$
(B)	$1.5\cos\left(\frac{7\pi}{4}t\right)$
(C)	$0.5\sin\left(\frac{7\pi}{4}t\right)$
(D)	$1.5\sin\left(\frac{7\pi}{4}t\right)$
Q.37	The Laplace transform of the continuous-time signal $x(t) = e^{-3t}u(t-5)$ is _____, where $u(t)$ denotes the continuous-time unit step signal.
(A)	$\frac{e^{-5s}}{s+3}, Real\{s\} > -3$
(B)	$\frac{e^{-5(s-3)}}{s-3}, Real\{s\} > 3$
(C)	$\frac{e^{-5(s+3)}}{s+3}, Real\{s\} > -3$
(D)	$\frac{e^{-5(s-3)}}{s+3}, Real\{s\} > -3$

admission.aglasem.com
aglasem.com

Q.38	In a p-i-n photodiode, a pulse of light containing 8×10^{12} incident photons at wavelength $\lambda_0 = 1.55$ µm gives rise to an average 4×10^{12} electrons collected at the terminals of the device. The quantum efficiency of the photodiode at this wavelength is _____%.
(A)	50
(B)	54.2
(C)	62.5
(D)	80
Q.39	Let $f(z) = j\frac{1-z}{1+z}$, where z denotes a complex number and j denotes $\sqrt{-1}$. The inverse function $f^{-1}(z)$ maps the real axis to the_____.
(A)	unit circle with centre at the origin
(B)	unit circle with centre not at the origin
(C)	imaginary axis
(D)	real axis

Organizing Institute: IIT Kanpur

admission.aglasem.com

aglasem.com

Q.40	The simplified form of the Boolean function F (W, X, Y, Z) = Σ (4, 5, 10, 11, 12, 13, 14, 15) with the minimum number of terms and smallest number of literals in each term is_____.
(A)	$WX + \bar{W}X\bar{Y} + W\bar{X}Y$
(B)	$WX + WY + X\bar{Y}$
(C)	$X\bar{Y} + WY$
(D)	$\bar{X}Y + \bar{W}\bar{Y}$
Q.41	For the given digital circuit, A = B = 1. Assume that AND, OR, and NOT gates have propagation delays of 10 ns, 10 ns, and 5 ns respectively. All lines have zero propagation delay. Given that C = 1 when the circuit is turned on, the frequency of steady-state oscillation of the output Y is _____.
	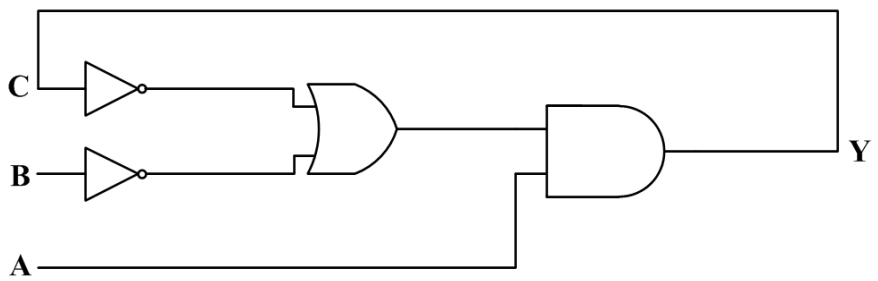
(A)	20 MHz
(B)	15 MHz
(C)	40 MHz
(D)	50 MHz

admission.aglasem.com

aglasem.com

Q.42	In the circuit shown, the initial binary content of shift register A is 1101 and that of shift register B is 1010. The shift registers are positive-edge triggered, and the gates have no delay. When the shift control is high, what will be the binary content of the shift registers A and B after four clock pulses?
	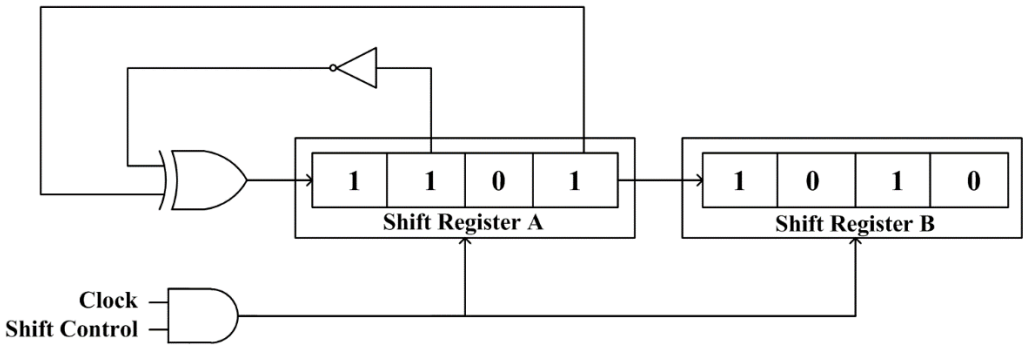
(A)	A = 1101, B = 1101
(B)	A = 1110, B = 1001
(C)	A = 0101, B = 1101
(D)	A = 1010, B = 1111

admission.aglasem.com

aglasem.com

Q.43	The magnitude and phase plots shown in the figure match with the transfer-function_____.
	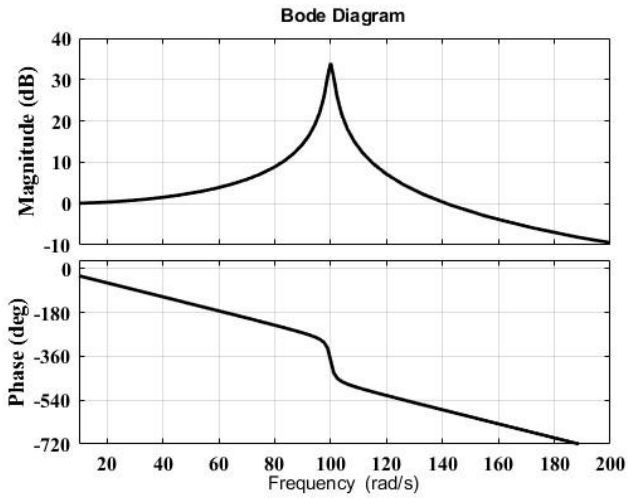
(A)	$\frac{10000}{s^2+2s+10000}$
(B)	$\frac{10000}{s^2+2s+10000}e^{-0.05s}$
(C)	$\frac{10000}{s^2+2s+10000}e^{-0.5\times10^{-12}s}$
(D)	$\frac{100}{s^2+2s+100}$

admission.aglasem.com

aglasem.com

Q.44	A continuous real-valued signal $x(t)$ has finite positive energy and $x(t) = 0, \forall\, t < 0$. From the list given below, select **ALL** the signals whose continuous-time Fourier transform is purely imaginary.
(A)	$x(t) + x(-t)$
(B)	$x(t) - x(-t)$
(C)	$j(x(t) + x(-t))$
(D)	$j(x(t) - x(-t))$
Q.45	A silica-glass fiber has a core refractive index of 1.47 and a cladding refractive index of 1.44. If the cladding is completely stripped out and the core is dipped in water having a refractive index of 1.33, the numerical aperture of the modified fiber is_____ (**rounded off to three decimal places**).

admission.aglasem.com

aglasem.com

Q.46	In the circuit shown, $\omega = 100\pi$ rad/s, $R_1 = R_2 = 2.2\ \Omega$ and L = 7 mH. The capacitance C for which Y_{in} is purely real is _____mF (**rounded off to two decimal places**).
	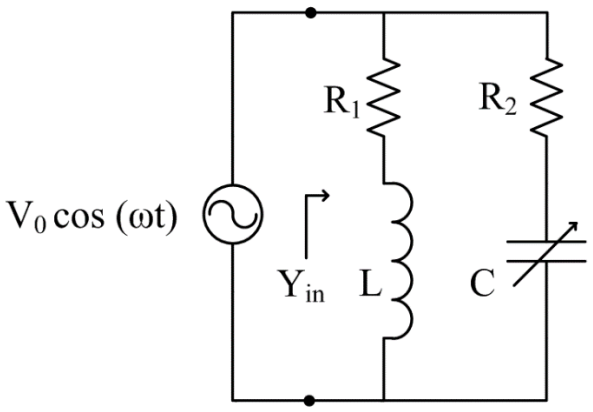
Q.47	The R-L circuit with R = 10 kΩ and L = 1 mH is excited by a step current $I_0u(t)$. At $t = 0^-$, there is a current $I_L = I_0/5$ flowing through the inductor. The minimum time taken for the current through the inductor to reach 99% of its final value is _____μs (**rounded off to two decimal places**).
	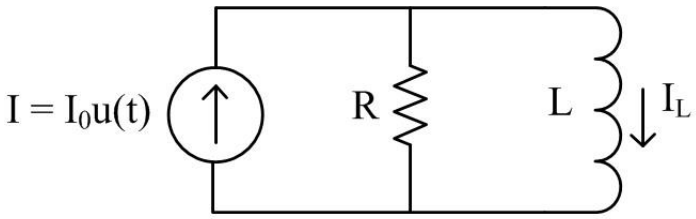

Organizing Institute: IIT Kanpur

admission.aglasem.com

aglasem.com

Q.48	Consider a standard negative feedback configuration with $G(s) = \frac{1}{(s-2)(s-3)}$ and the controller $C(s) = K_P + \frac{K_I}{s} + K_D s$. The root-locus of $G(s)C(s)$ is presented in the figure below. The gain $C(j\omega) = 2$ at $\omega = 1$ rad/s. The value of K_D is _____ (**rounded off to one decimal place**).
	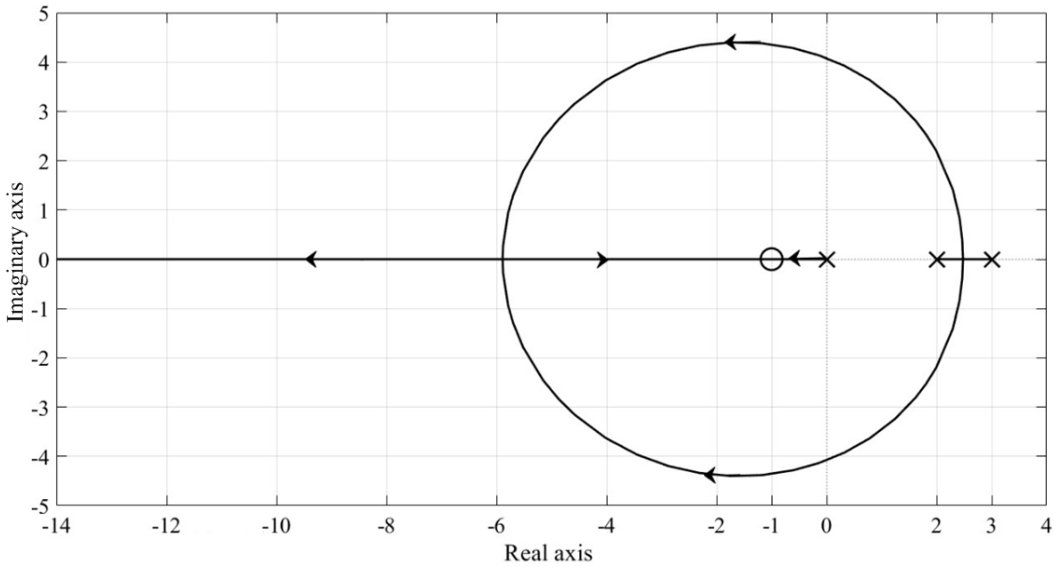
Q.49	How many five-digit numbers can be formed using the integers 3, 4, 5 and 6 with exactly one digit appearing twice?
Q.50	The phase margin of the transfer function $G(s) = \frac{2\,(1-s)}{(1+s)^2}$ is _____degrees. (**rounded off to the nearest integer**).
Q.51	A wire-wound 'resistive potentiometer type' angle sensor with 72 turns is used in an application. The first turn of the potentiometer is connected to ground while its last turn is connected to 3.6 V. The width of the wiper covers two turns ensuring make-before-break. The output (wiper) voltage when the wiper is on top of both the turns 35 and 36 is _____V (**rounded off to two decimal places**).

admission.aglasem.com

aglasem.com

Q.52	The two secondaries of a linear variable differential transformer (LVDT) showed a magnitude of 2 V (RMS) for zero displacement position of the core. It is noted that the phase of one of the secondaries has a deviation of one degree from the expected phase. Other than this deviation, the LVDT is ideal. If the differential output sensitivity of the LVDT is 1 mV (RMS)/1 µm, the output for zero displacement is _____ µm (**rounded off to one decimal place**).
Q.53	Five measurements are made using a weighing machine, and the readings are 80 kg, 79 kg, 81 kg, 79 kg and 81 kg. The sample standard deviation of the measurement is _____ kg (**rounded off to two decimal places**).
Q.54	Four strain gauges R_A, R_B, R_C and R_D, each with nominal resistance R, are connected in a bridge configuration. When a force is applied, R_A and R_D increase by ΔR and R_B and R_C decrease by ΔR as shown. A potentiometer with total resistance R_v is connected as shown. If R = 100 Ω, and ΔR = 1 Ω, the minimum value of resistance R_v required to balance the bridge is _____Ω (**rounded off to two decimal places**).
	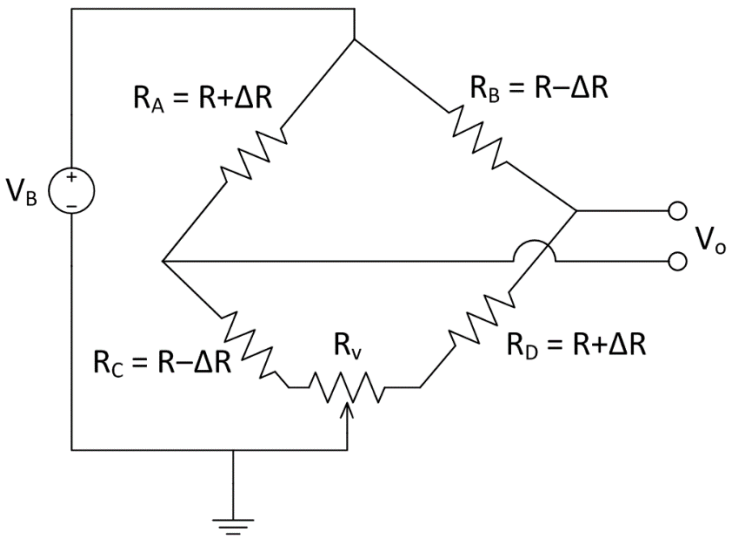

admission.aglasem.com

aglasem.com

Q.55	A sinusoidal current of $i_1(t) = 1\sin(200\pi t)$ mA is flowing through a 4 H inductor which is mutually coupled to another 5 H inductor carrying $$i_2(t) = 2\sin(200\pi t)\text{ mA}$$ as shown in the figure. The coupling coefficient between the inductors is 0.6. The peak energy stored in the circuit is _____μJ (**rounded off to two decimal places**).
	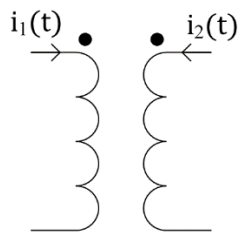
Q.56	The figure below shows a feedback amplifier constructed using an nMOS transistor. Assume that $\mu_n C_{ox}$ = 1 mA/V^2, threshold voltage V_T = 1V and W/L = 2. The bias voltage at the drain terminal is 4 V. The capacitors C_∞ offer zero impedance at the signal frequency. The ratio V_{out}/V_{in} is _____(**rounded off to two decimal places**).
	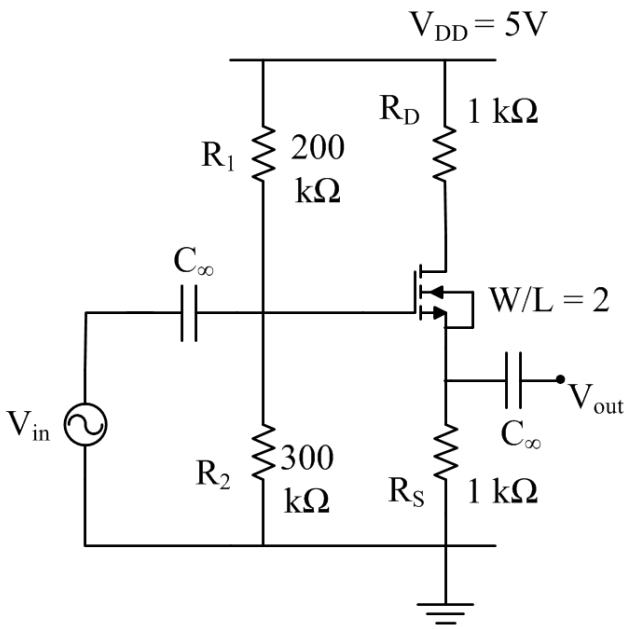

admission.aglasem.com

aglasem.com

Q.57	Consider the real-valued function $g(x) = \max\{(x-2)^2, -2x+7\}$, where $x \in (-\infty, \infty)$. The minimum value attained by $g(x)$ is _____ (**rounded off to one decimal place**).
Q.58	A short-circuit test is conducted on a single-phase transformer by shorting its secondary. The frequency of input voltage is 1 kHz. The corresponding wattmeter reading, primary current and primary voltage are 8 W, 2 A and 6 V respectively. Assume that the no-load losses and the no-load currents are negligible, and the core has linear magnetic characteristics. Keeping the secondary shorted, the primary is connected to a 2 V (RMS), 1 kHz sinusoidal source in series with a $\frac{1}{2\pi\sqrt{5}}$ mF capacitor. The primary current (RMS) will be _____ A (**rounded off to two decimal places**).
Q.59	The opamps in the circuit are ideal. The input signals are $V_{S1} = 3 + 0.10\sin(300t)$ V and $V_{S2} = -2 + 0.11\sin(300t)$ V. The average value of the voltage V_0 is _____V (**rounded off to two decimal places**).
	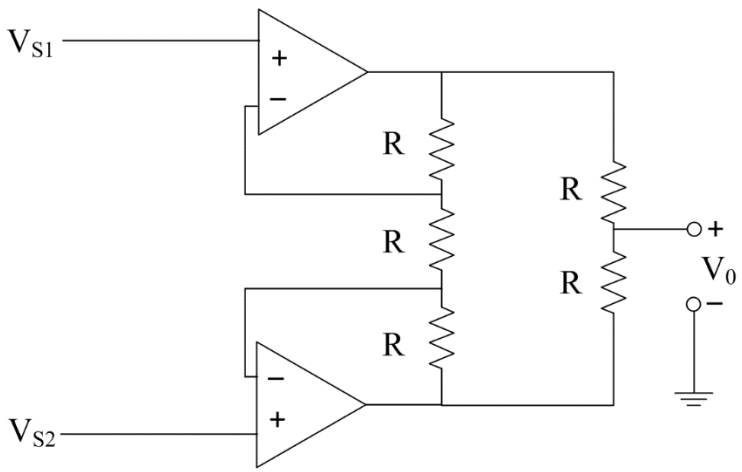

Organizing Institute: IIT Kanpur

admission.aglasem.com

aglasem.com

Q.60	In the circuit shown, the input voltage V_{in} = 100 mV. The switch and the opamp are ideal. At time t = 0, the initial charge stored in the 10 nF capacitor is 1 nC, with the polarity as indicated in the figure. The switch S is controlled using a 1 kHz square-wave voltage signal V_s as shown. Whenever V_s is 'High', S is in position '1' and when V_s is 'Low', S is in position '2'. At t = 20 ms, the magnitude of the voltage V_o will be _____ mV (**rounded off to the nearest integer**).
	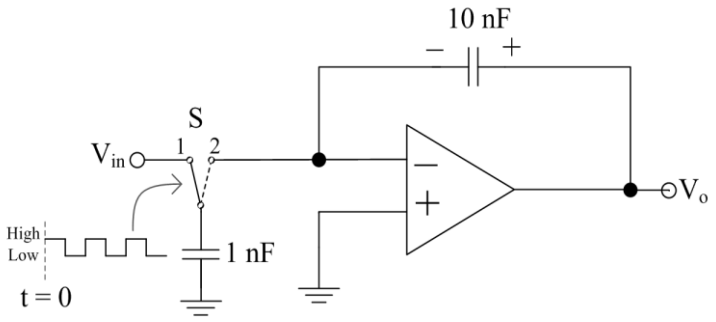
Q.61	In the diagram shown, the frequency of the sinusoidal source voltage V_S is 50 Hz. The load voltage is 230 V (RMS), and the load impedance is $\frac{230}{\sqrt{2}} + j\frac{230}{\sqrt{2}}$ Ω. The value of attenuator $A_1 = \frac{1}{50\sqrt{2}}$. The multiplier output voltage $V_o = \frac{V_x V_y}{1\,V}$, where V_x and V_y are the inputs. The magnitude of the average value of the multiplier output V_o is _____V (**rounded off to one decimal place**).
	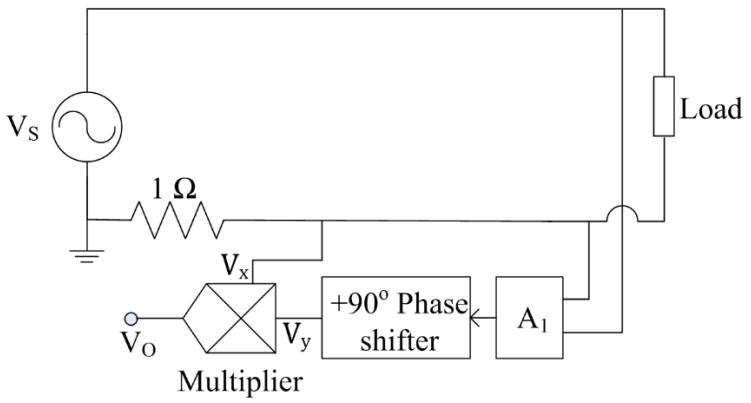

Organizing Institute: IIT Kanpur

admission.aglasem.com

aglasem.com

Q.62	In the circuit shown, assuming an ideal opamp, the value of the output voltage V_o = ____ V (**rounded off to one decimal place**).
	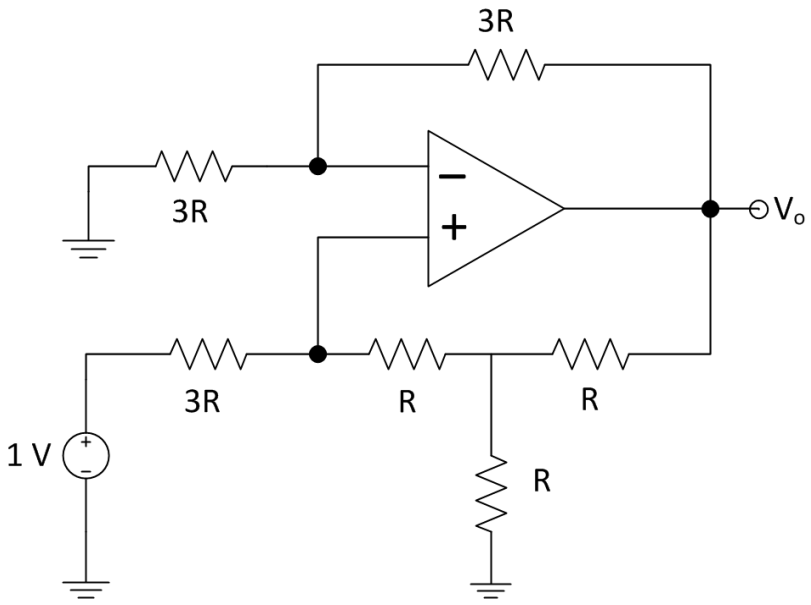
Q.63	The rank of the matrix A given below is one. The ratio $\frac{\alpha}{\beta}$ is _____ (**rounded off to the nearest integer**).
	$$A = \begin{bmatrix} 1 & 4 \\ -3 & \alpha \\ \beta & 6 \end{bmatrix}$$
Q.64	A 1.999 V True RMS 3-1/2 digit multimeter has an accuracy of ±0.1 % of reading ±2 digits. It is used to measure 100 A (RMS) current flowing through a line using a 100:5 ratio, Class-1 current transformer with a burden of 0.1 Ω ±0.5 %. The worst-case absolute error in the multimeter output is _____ V (**rounded off to three decimal places**).

admission.aglasem.com

aglasem.com

Q.65	The voltage source Vs = $10\sqrt{2}\,sin(20000\pi t)$ V has an internal resistance of 50 Ω. The RMS value of the current through R is_____mA (**rounded off to one decimal place**).
	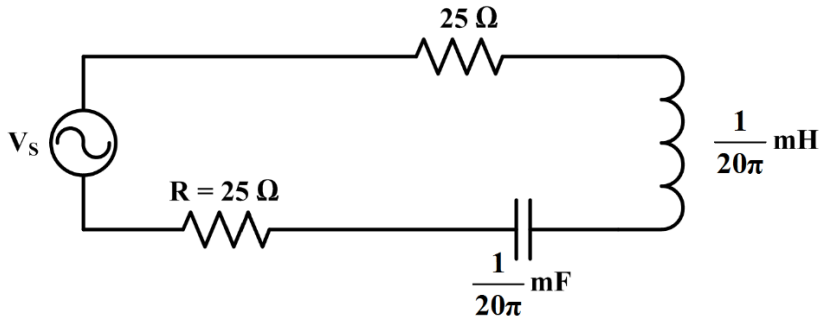

*This option did not appear in GATE 2023 Examination. It appeared as "Turbine flow meter", that is, "Turbine flow meter" option was repeated.

END OF QUESTION PAPER

admission.aglasem.com
AglaSem Institute, Kanpur
AglaSem Earn while Learn Program. Send your papers and get paid.
Contact: support@aglasem.com
aglasem.com