Graduate Aptitude Test in Engineering

Notations :

1.Options shown in green color and with ✔ icon are correct.

2.Options shown in red color and with ✖ icon are incorrect.

Question Paper Name: PI : PRODUCTION AND INDUSTRIAL ENGINEERING 1st Feb Shift2
Number of Questions: 65
Total Marks: 100.0

Wrong answer for MCQ will result in negative marks, (-1/3) for 1 mark Questions and (-2/3) for 2 marks Questions.

General Aptitude

Number of Questions: 10
Section Marks: 15.0

Q.1 to Q.5 carry 1 mark each & Q.6 to Q.10 carry 2 marks each.

Question Number : 1 Question Type : MCQ

Choose the appropriate word/phrase, out of the four options given below, to complete the following sentence:

Apparent lifelessness _____ dormant life.

(A) harbours (B) leads to (C) supports (D) affects

Options :

1. ✔ A
2. ✖ B
3. ✖ C
4. ✖ D

Question Number : 2 Question Type : MCQ

Fill in the blank with the correct idiom/phrase.

That boy from the town was a _____ in the sleepy village.

(A) dog out of herd (B) sheep from the heap
(C) fish out of water (D) bird from the flock

Options :

1. ✖ A
2. ✖ B
3. ✔ C
4. ✖ D

Question Number : 3 Question Type : MCQ

www.admission.aglasem.com

Choose the statement where underlined word is used correctly.

(A) When the teacher eludes to different authors, he is being elusive.
(B) When the thief keeps eluding the police, he is being elusive.
(C) Matters that are difficult to understand, identify or remember are allusive.
(D) Mirages can be allusive, but a better way to express them is illusory.

Options :

1. ✖ A
2. ✔ B
3. ✖ C
4. ✖ D

Question Number : 4 Question Type : MCQ

Tanya is older than Eric.
Cliff is older than Tanya.
Eric is older than Cliff.

If the first two statements are true, then the third statement is:

(A) True
(B) False
(C) Uncertain
(D) Data insufficient

Options :

1. ✖ A
2. ✔ B
3. ✖ C
4. ✖ D

Question Number : 5 Question Type : MCQ

Five teams have to compete in a league, with every team playing every other team exactly once, before going to the next round. How many matches will have to be held to complete the league round of matches?

(A) 20 (B) 10 (C) 8 (D) 5

Options :

1. ✖ A
2. ✔ B
3. ✖ C
4. ✖ D

Question Number : 6 Question Type : MCQ

www.admission.aglasem.com

Select the appropriate option in place of underlined part of the sentence.

Increased productivity necessary reflects greater efforts made by the employees.

(A) Increase in productivity necessary
(B) Increase productivity is necessary
(C) Increase in productivity necessarily
(D) No improvement required

Options :

1. ✖ A
2. ✖ B
3. ✔ C
4. ✖ D

Question Number : 7 Question Type : MCQ

Given below are two statements followed by two conclusions. Assuming these statements to be true, decide which one logically follows.

Statements:

I. No manager is a leader.
II. All leaders are executives.

Conclusions:

I. No manager is an executive.
II. No executive is a manager.

(A) Only conclusion I follows.
(B) Only conclusion II follows.
(C) Neither conclusion I nor II follows.
(D) Both conclusions I and II follow.

Options :

1. ✖ A
2. ✖ B
3. ✔ C
4. ✖ D

Question Number : 8 Question Type : NA

In the given figure angle Q is a right angle, PS:QS = 3:1, RT:QT = 5:2 and PU:UR = 1:1. If area of triangle QTS is 20 cm^2, then the area of triangle PQR in cm^2 is _____.

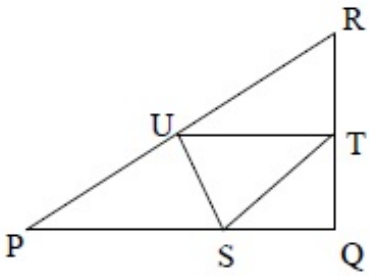

Correct Answer :

280

www.admission.aglasem.com

Question Number : 9 Question Type : MCQ

Right triangle PQR is to be constructed in the xy - plane so that the right angle is at P and line PR is parallel to the x-axis. The x and y coordinates of P, Q, and R are to be integers that satisfy the inequalities: $-4 \le x \le 5$ and $6 \le y \le 16$. How many different triangles could be constructed with these properties?

(A) 110 (B) 1,100 (C) 9,900 (D) 10,000

Options :

1. ✖ A
2. ✖ B
3. ✔ C
4. ✖ D

Question Number : 10 Question Type : MCQ

A coin is tossed thrice. Let X be the event that head occurs in each of the first two tosses. Let Y be the event that a tail occurs on the third toss. Let Z be the event that two tails occur in three tosses. Based on the above information, which one of the following statements is TRUE?

(A) X and Y are not independent
(B) Y and Z are dependent
(C) Y and Z are independent
(D) X and Z are independent

Options :

1. ✖ A
2. ✔ B
3. ✖ C
4. ✖ D

www.admission.aglasem.com

Production and Industrial Engineering

Number of Questions:	55
Section Marks:	85.0

Q.11 to Q.35 carry 1 mark each & Q.36 to Q.65 carry 2 marks each.

Question Number : 11 Question Type : MCQ

In numerical integration using Simpson's rule, the approximating function in the interval is a

(A) constant (B) straight line (C) cubic B-Spline (D) parabola

Options :

1. ✖ A
2. ✖ B
3. ✖ C
4. ✔ D

Question Number : 12 Question Type : MCQ

If a constant force $\vec{f}$ applied on an object P, displaces it by a distance $\vec{d}$, inclined at an angle θ to the direction of force $\vec{f}$, then the work done by the force $\vec{f}$ is

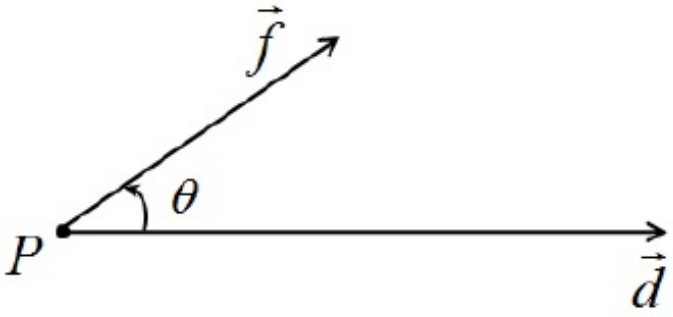

(A) $\text{div}(\vec{f}\times\vec{d})$ (B) $\left|\vec{f}\times(\text{curl}\,\vec{d})\right|$ (C) $\left|\vec{f}\times\vec{d}\right|$ (D) $\vec{f}.\vec{d}$

Options :

1. ✖ A
2. ✖ B
3. ✖ C
4. ✔ D

Question Number : 13 Question Type : MCQ

A product is an assembly of 5 different components. The product can be sequentially assembled in two possible ways. If the 5 components are placed in a box and these are drawn at random from the box, then the probability of getting a correct sequence is

(A) $\frac{2}{5!}$ (B) $\frac{2}{5}$ (C) $\frac{2}{(5-2)!}$ (D) $\frac{2}{(5-3)!}$

Options :

1. ✔ A
2. ✖ B
3. ✖ C
4. ✖ D

Question Number : 14 Question Type : MCQ

The function $f(x)=x^x=x+x+x+\ldots x$ times, is defined

(A) at all real values of x
(B) only at positive integer values of x
(C) only at negative integer values of x
(D) only at rational values of x

Options :

1. ✖ A
2. ✔ B
3. ✖ C
4. ✖ D

Question Number : 15 Question Type : MCQ

www.admission.aglasem.com

The room-temperature stress (σ)-strain (ε) curves of four materials P, Q, R, and S are shown in the figure below. The material that behaves as a rigid perfectly plastic material is

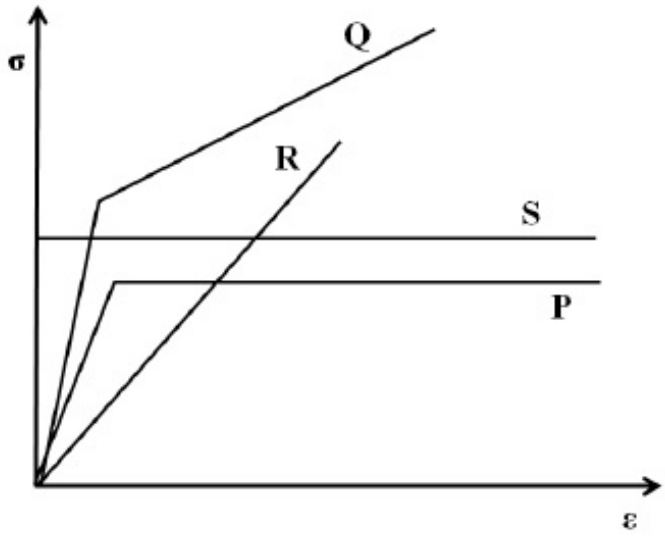

(A) P (B) Q (C) R (D) S

Options :

1. ✖ A
2. ✖ B
3. ✖ C
4. ✔ D

Question Number : 16 Question Type : NAT

The true stress at fracture of a tensile tested specimen, having an initial diameter of 13 mm, is 700 MPa. If the diameter of specimen at fracture is 10 mm, then the engineering stress, in MPa, at fracture is _____.

Correct Answer :

412 to 416

Question Number : 17 Question Type : NAT

If the principal stress values are 120 MPa, –50 MPa and 10 MPa in a given state of stress, then maximum shear stress in the material, in MPa, is _____.

Correct Answer :

85

Question Number : 18 Question Type : MCQ

www.admission.aglasem.com

Match the items in the first column to their functions in the second column.

P.	Sprue	1.	regulates flow of molten metal into mould cavity
Q.	Riser	2.	feeds molten metal from pouring basin to gate
R.	Gate	3.	acts as a reservoir for molten metal
S.	Pouring basin	4.	supplies molten metal to compensate for liquid shrinkage

(A) P-1, Q-2, R-3, S-4
(B) P-2, Q-4, R-1, S-3
(C) P-4, Q-2, R-1, S-3
(D) P-2, Q-4, R-3, S-1

Options :

1. ✖ A
2. ✔ B
3. ✖ C
4. ✖ D

Question Number : 19 Question Type : MCQ

In rolling of a flat strip, the relative velocity of strip with respect to the roller is

(A) positive at entry plane, negative at exit plane
(B) negative at entry plane, positive at exit plane
(C) positive throughout from entry to exit plane
(D) negative throughout from entry to exit plane

Options :

1. ✖ A
2. ✔ B
3. ✖ C
4. ✖ D

Question Number : 20 Question Type : NAT

The maximum reduction per pass during wire drawing of an aluminum alloy ignoring friction and redundant work is 77%. The strain hardening exponent of the material is _____.

Correct Answer :

0.4 to 0.5

Question Number : 21 Question Type : MCQ

Built-up edge formation decreases under the conditions listed below **EXCEPT**

(A) at low cutting speeds
(B) using large positive rake angle
(C) with sharper tool
(D) using cutting fluid

Options :

1. ✔ A
2. ✖ B
3. ✖ C

www.admission.aglasem.com

4. ✖ D

Question Number : 22 Question Type : MCQ

During turning of mild steel work material, the maximum temperature is observed at

(A) primary deformation zone
(B) tool and chip interface
(C) tool-flank and work interface
(D) machined sub-surface

Options :

1. ✖ A
2. ✔ B
3. ✖ C
4. ✖ D

Question Number : 23 Question Type : MCQ

Which one of the following statements related to grinding process is **INCORRECT**?

(A) Grinding wheels made of finer abrasive grains produce better surface finish.
(B) Abrasive grains tend to fracture frequently during the grinding process.
(C) Specific energy in grinding is higher than that in turning.
(D) Cutting speed in grinding process is much lower than that in face milling.

Options :

1. ✖ A
2. ✖ B
3. ✖ C
4. ✔ D

Question Number : 24 Question Type : MCQ

For an assembly made of n components, the dimensions on each component i follow a normal distribution and have tolerance T_i. Overall dimension of the assembly is L_a with tolerance T_a. The relationship between T_a and T_i is

(A) $T_a = L_a\sqrt{\sum_{i=1}^{n} T_i^2}$
(B) $T_a = \sqrt{\sum_{i=1}^{n} T_i^2}$
(C) $T_a = \sqrt{L_a \sum_{i=1}^{n} T_i^2}$
(D) $T_a = L_a + \sqrt{\sum_{i=1}^{n} T_i^2}$

Options :

1. ✖ A
2. ✔ B
3. ✖ C
4. ✖ D

Question Number : 25 Question Type : MCQ

www.admission.aglasem.com

Which of the following **DO NOT** influence the material removal rate in Electrical Discharge Machining process?

(i) Hardness of work piece material
(ii) Melting temperature of work piece material
(iii) Hardness of tool material
(iv) Discharge current and frequency

(A) (i) and (ii) (B) (i) and (iii) (C) (iii) and (iv) (D) (i), (ii) and (iii)

Options :

1. ✖ A
2. ✔ B
3. ✖ C
4. ✖ D

Question Number : 26 Question Type : MCQ

In Computer Aided Process Planning, determination of process sequence for manufacture of any part design without predefined standard plans is known as

(A) variant type process planning
(B) retrieval type process planning
(C) generative type process planning
(D) group technology based process planning

Options :

1. ✖ A
2. ✖ B
3. ✔ C
4. ✖ D

Question Number : 27 Question Type : MCQ

The angle of a twist drill that determines its rake angle is

(A) lip relief angle (B) chisel edge angle (C) helix angle (D) point angle

Options :

1. ✖ A
2. ✖ B
3. ✔ C
4. ✖ D

Question Number : 28 Question Type : MCQ

A line balancing problem is solved in the context of

(A) process layout
(B) fixed position layout
(C) product layout
(D) production schedule

Options :

1. ✖ A
2. ✖ B

www.admission.aglasem.com

3. ✔ C
4. ✖ D

Question Number : 29 Question Type : MCQ

Solution to the balanced assignment problem is binary due to

(A) linear formulation
(B) non-empty feasible region
(C) approximation algorithms
(D) uni-modularity property

Options :

1. ✖ A
2. ✖ B
3. ✖ C
4. ✔ D

Question Number : 30 Question Type : MCQ

Material Requirements Planning **DOES NOT** include

(A) material price
(B) bill of material
(C) inventory level
(D) production schedule

Options :

1. ✔ A
2. ✖ B
3. ✖ C
4. ✖ D

Question Number : 31 Question Type : MCQ

Ishikawa diagram represents

(A) different types of quality defects
(B) quantitative relation between the extent of defect and a process parameter
(C) relation between defects and their causes
(D) prioritized quality defects

Options :

1. ✖ A
2. ✖ B
3. ✔ C
4. ✖ D

Question Number : 32 Question Type : MCQ

As per the principles of motion economy, which one of the following is **NOT** a pivot for a classified movement of human body?

(A) Knee (B) Elbow (C) Torso (D) Wrist

Options :

1. ✔ A
2. ✖ B

www.admission.aglasem.com

3. ✖ C
4. ✖ D

Question Number : 33 Question Type : NAT

For air travel over a distance of 500 km, the ticket price is *Rs.* 4000. The comfort of the air travel can be monetized at *Rs.*3000, and the monetary value of time saved because of air travel is *Rs.*3000. The value of air travel is _____.

Correct Answer :
1.5

Question Number : 34 Question Type : MCQ

Which one of the following is **NOT** in the scope of Enterprise Resource Planning (ERP) system?

(A) General ledger entries
(B) Materials management system
(C) Order management system
(D) Employee promotion policy

Options :
1. ✖ A
2. ✖ B
3. ✖ C
4. ✔ D

Question Number : 35 Question Type : NAT

If standard production is 20 units, a worker's actual output is 18 units, piece rate is *Rs.* 500 per unit, and over-achievement rate is *Rs.* 750 per unit, then the wage paid to the worker, in *Rs.*, as per Taylor's differential price rate wage incentive plan, is _____.

Correct Answer :
9000

Question Number : 36 Question Type : MCQ

The solution to $6yy' - 25x = 0$ represents a

(A) family of circles
(B) family of ellipses
(C) family of parabolas
(D) family of hyperbolas

Options :
1. ✖ A
2. ✖ B
3. ✖ C

www.admission.aglasem.com

4. ✔ D

Question Number : 37 Question Type : MCQ

The solution to $x^2y'' + xy' - y = 0$ is

(A) $y = c_1x^2 + c_2x^{-3}$ (B) $y = c_1 + c_2x^{-2}$ (C) $y = c_1x + \frac{c_2}{x}$ (D) $y = c_1x + c_2x^4$

Options :

1. ✖ A
2. ✖ B
3. ✔ C
4. ✖ D

Question Number : 38 Question Type : MCQ

Match the linear transformation matrices listed in the first column to their interpretations in the second column.

P.	$\begin{bmatrix} 1 & 0 \\ 0 & 0 \end{bmatrix}$	1.	Stretch in the y-axis
Q.	$\begin{bmatrix} 0 & 0 \\ 0 & 1 \end{bmatrix}$	2.	Uniform stretch in x and y-axes
R.	$\begin{bmatrix} 1 & 0 \\ 0 & 3 \end{bmatrix}$	3.	Projection in x-axis
S.	$\begin{bmatrix} 4 & 0 \\ 0 & 4 \end{bmatrix}$	4.	Projection in y-axis

(A) P-1, Q-2, R-3, S-4
(B) P-2, Q-3, R-4, S-1
(C) P-3, Q-4, R-1, S-2
(D) P-4, Q-1, R-2, S-3.

Options :

1. ✖ A
2. ✖ B
3. ✔ C
4. ✖ D

Question Number : 39 Question Type : MCQ

The value of $\lim_{(x,y)\to(0,0)} \frac{x^2 - xy}{\sqrt{x} - \sqrt{y}}$ is

(A) 0 (B) $\frac{1}{2}$ (C) 1 (D) ∞

Options :

1. ✔ A

www.admission.aglasem.com

2. ✖ B
3. ✖ C
4. ✖ D

Question Number : 40 Question Type : MCQ

The curve $y = x^4$ is

(A) concave up for all values of x
(B) concave down for all values of x
(C) concave up only for positive values of x
(D) concave up only for negative values of x

Options :

1. ✔ A
2. ✖ B
3. ✖ C
4. ✖ D

Question Number : 41 Question Type : NAT

A metallic bar of uniform cross-section with specific weight of 100 kN/m^3 is hung vertically down. The length and Young's modulus of the bar are 100 m and 200 GPa, respectively. The elongation of the bar, in mm, due to its own weight is _____.

Correct Answer :

2.5

Question Number : 42 Question Type : NAT

A beam is loaded as shown in the figure.

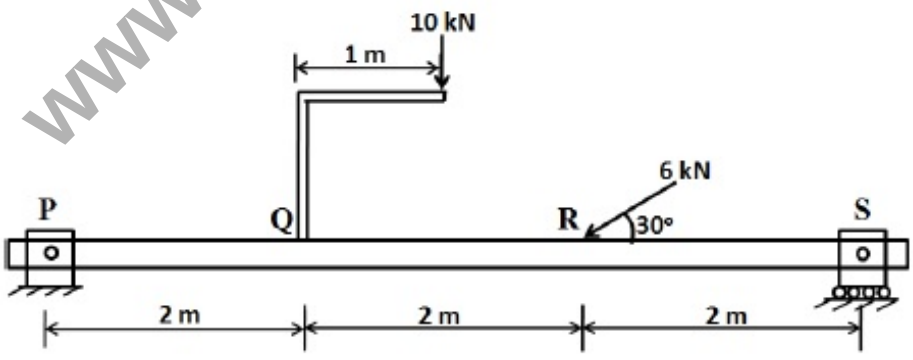

The bending moment, in Nm, at point R is _____.

Correct Answer :

14

www.admission.aglasem.com

Question Number : 43 Question Type : MCQ

In an off-set slider crank mechanism, shown in figure, the crank is rotated at a constant speed of 150 rpm. The value of the angle θ shown in the figure is 20^0. What is the ratio of forward to return stroke time? Can this mechanism be used in an application involving quick return?

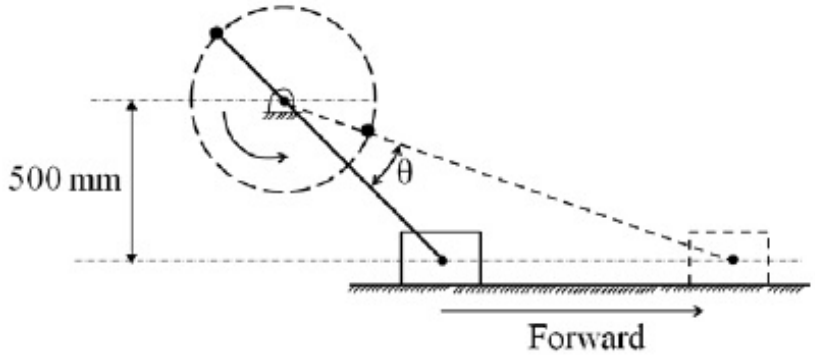

(A) 3.33, No (B) 0.73, Yes (C) 1.25, Yes (D) 0.73, No

Options :

1. ✖ A
2. ✖ B
3. ✔ C
4. ✖ D

Question Number : 44 Question Type : NAT

In a 1 m thick wall, the temperature distribution at a given instant is $T(x) = c_0 + c_1x + c_2x^2$ where T is in °C and x is in m. The constants are: c_0 = 800 °C, c_1 = –250 °C/m and c_2 = –40 °C/m^2. The thermal conductivity of the wall is 50 W/mK and wall area is 5 m^2. If there is a heat source generating uniform volumetric heating at the rate of 500 W/m^3 inside the wall, then the rate of change of energy storage in the wall, in kW, is _____.

Correct Answer :

-17.5

Question Number : 45 Question Type : MCQ

www.admission.aglasem.com

In a vertical piston-cylinder arrangement the force applied to the piston, pushes water through a nozzle as shown in the figure. The water flows out from the nozzle, and reaches the top of its trajectory. The kinetic and pressure energies at points (1), (2) and (3), respectively, are

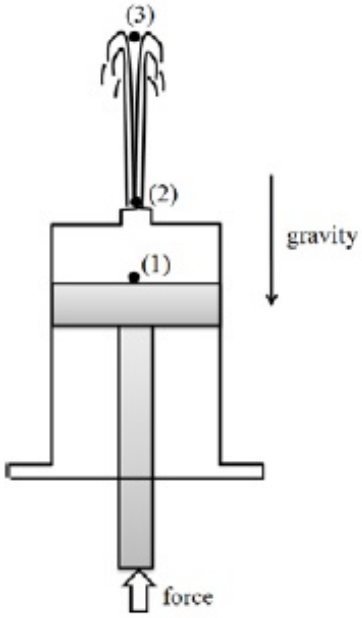

(A) (small and large), (large and zero) and (zero and zero)
(B) (small and zero), (large and large) and (small and zero)
(C) (large and zero), (zero and large) and (large and zero)
(D) (large and small), (small and zero) and (small and large)

Options :

1. ✔ A
2. ✖ B
3. ✖ C
4. ✖ D

Question Number : 46 Question Type : MCQ

www.admission.aglasem.com

Consider a glass-fiber reinforced polymer material. The stress-strain curves of the fiber, matrix and composite are plotted in the figure. Which one of the following statements is **TRUE**?

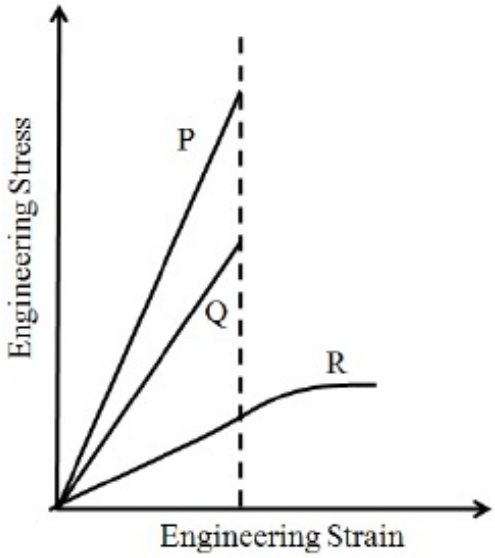

(A) Curve P represents the composite, Curve Q the matrix and Curve R the fiber.
(B) Curve Q represents the composite, Curve R the matrix and Curve P the fiber.
(C) Curve R represents the composite, Curve P the matrix and Curve Q the fiber.
(D) Curve P represents the composite, Curve R the matrix and Curve Q the fiber.

Options :

1. ✖ A
2. ✔ B
3. ✖ C
4. ✖ D

Question Number : 47 Question Type : NAT

A mould for injection moulding is designed for polymer **P** having shrinkage of 0.010 mm/mm. A critical dimension needed in the moulded part is 35 mm. If the same mould is now used to make a similar part but made of a different polymer **Q** with shrinkage of 0.025 mm/mm, then the critical dimension in the moulded part made of polymer **Q**, in mm, is _____.

www.admission.aglasem.com

Correct Answer :

34.4 to 34.5

Question Number : 48 Question Type : NAT

Open die forging of a cylinder made of a rigid perfectly plastic material with yield strength of 200 MPa having a height of 25 mm and diameter of 25 mm is being carried out. The cylinder is subjected to a true compressive strain of 3.6 during the process. Assuming frictionless and homogeneous deformation, the energy expended, in kJ, is _____.

Correct Answer :

8820 to 8840

Question Number : 49 Question Type : NAT

In drilling operation, a twist-drill of 30 mm diameter with point angle of 118 degrees is used. If the CNC command issued to execute the drilling operation is G90 G01 Z?? F20. The datum is defined on the top surface of the work material and the approach distance is 3 mm. Then, to achieve a cylindrical hole depth of 40 mm, the Z coordinate to be provided in the CNC command, in mm, is _____.

Correct Answer :

-50 to -48

Question Number : 50 Question Type : NAT

In an orthogonal machining experiment carried out using a cutting tool with zero degree rake angle, the measured cutting force was 1700 N. If the friction angle at the rake face-chip interface is 26°, then the thrust force value, in N, is _____.

Correct Answer :

825 to 835

Question Number : 51 Question Type : NAT

In a slab milling operation, a cutter of 75 mm diameter with sufficient width is used to remove 5 mm thick material from a 200 mm long part in a single pass. The minimum length of travel, in mm, for the cutter to engage and completely cut the part surface is _____.

Correct Answer :

218 to 219

Question Number : 52 Question Type : NAT

In a metal casting process, molten copper alloy is poured into a sand mould. The level of molten metal in the pouring basin is at a height of 300 mm from the runner having diameter of 10 mm. If the density and melting temperature of molten copper alloy are 9000 kg/m^3 and 1000°C, respectively, then the rate of flow of molten metal into the mould neglecting friction and other losses, in cm^3/s, is _____.

Correct Answer :

185 to 195

www.admission.aglasem.com

Question Number : 53 Question Type : MCQ

Two aluminum alloy plates each 10 mm thick and 1 m long are welded without crowning by multi-pass tungsten inert gas butt welding. The joint configuration is V-type with 60° angle and root gap is maintained at 5 mm. If electrode of 5 mm diameter with 500 mm length is used for welding, then the number of electrodes required is

(A) 7 (B) 9 (C) 11 (D) 13

Options :

1. ✖ A
2. ✖ B
3. ✔ C
4. ✖ D

Question Number : 54 Question Type : NAT

A surface is prepared specially for an application with the profile as shown in the figure.

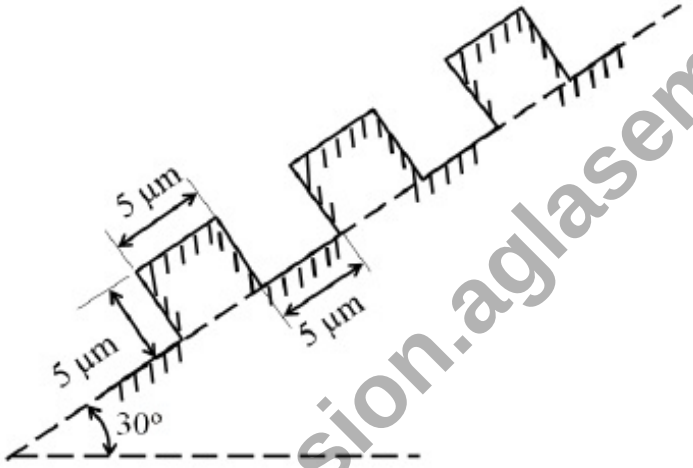

The theoretical R_a value for this surface, in µm, is _____.

www.admission.aglasem.com

Correct Answer :

2.5

Question Number : 55 Question Type : NAT

During the measurement of internal taper of a part using standard balls of diameter 15 mm and 20 mm, the large ball is found to protrude by 5 mm (h_1) and the top of small ball is found to be 35 mm (h_2) below the top face of the gauge. The taper angle, in degree, is _____

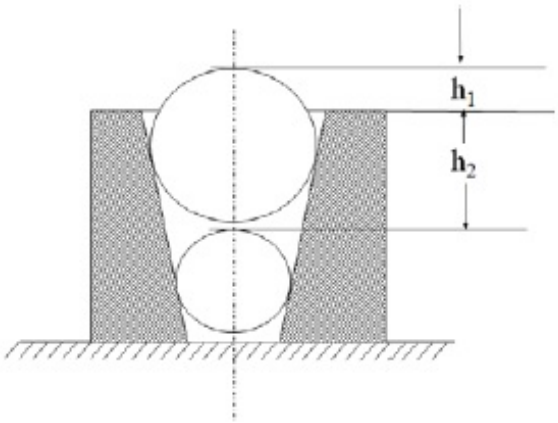

Correct Answer :
3.7 to 3.9

Question Number : 56 Question Type : NAT

In a Flexible Manufacturing System, the Automated Guided Vehicles (AGV) move at a speed of 50 m/min, cover an average distance of 150 m to deliver and 100 m for return. If the time required for pick-up and drop is 30 s each, neglecting idle times, then the number of AGVs required to meet the demand of 50 deliveries per hour is _____.

Correct Answer :
5

Question Number : 57 Question Type : NAT

A machine is bought for *Rs.* 25,00,000. The organization follows a declining balance method of depreciation with a depreciation charge of 25%. If the machine is sold at *Rs.*17,50,000 at the end of second year, then the profit on the book, in *Rs.*, is _____.

Correct Answer:
343749 to 343751

Question Number : 58 Question Type : NAT

A manufacturing line requires 7.2 minutes to make a product. The line has six workstations arranged as per the required sequence of operations. Total production required is 300 products in 7.5 hours. At steady state, the line efficiency, in %, is _____.

www.admission.aglasem.com

Correct Answer :
80

Question Number : 59 Question Type : MCQ

A single facility is to be located to meet the demand at coordinates (1, 2), (2, 3), (3, 5) and (4, 1). The demand at these points is 700, 100, 300 and 500 respectively. Using the rectilinear distance measure and weighted distance minimization criterion, the facility should be located

(A) anywhere on the line joining points (2, 2) and (3, 2)
(B) at the point (2, 3)
(C) anywhere on the line joining (2, 3) and (3, 3)
(D) at the point (3, 3)

Options :
1. ✔ A
2. ✖ B
3. ✖ C
4. ✖ D

Question Number : 60 Question Type : MCQ

The value of (X_1, X_2) for an optimal solution for

Minimize $Z = 6X_1 - 8X_2$

subject to: $5X_1 + 10X_2 \leq 30$

$4X_1 + 4X_2 \leq 20$

$X_1 \geq 0, X_2 \geq 0$

is

(A) (0, 0) (B) (1, 6) (C) (0, 3) (D) (3, 7)

Options :
1. ✖ A
2. ✖ B
3. ✔ C
4. ✖ D

Question Number : 61 Question Type : MCQ

Arrival of machines for repair in a maintenance shop follows a Poisson distribution at a rate of one per 18 hours. The time to repair follows an exponential distribution with Mean Time To Repair (MTTR) of 14 hours. If the productivity loss is *Rs.*22,500 per hour, then the total expected loss of productivity due to machine breakdowns, in *Rs.*, is

(A) 78,750 (B) 1,01,250 (C) 11,81,250 (D) 14,17,500

Options :
1. ✖ A
2. ✖ B
3. ✖ C

www.admission.aglasem.com

4. ✔ D

Question Number : 62 Question Type : MCQ

In a manufacturing process, 24 samples each of size 50 items were inspected and a total of 52 defective items were observed. The lower and upper control limits set for the p-chart should, respectively, be

(A) (0.043, 0.12) (B) (–0.043, 0.086) (C) (–0.043, 0.10) (D) (0, 0.13)

Options :

1. ✖ A
2. ✖ B
3. ✖ C
4. ✔ D

Question Number : 63 Question Type : NAT

Data on five products to be processed on a single machine is given below:

Product	Release time	Processing time	Due date
P	0	3	10
Q	2	4	9
R	0	2	15
S	1	5	11
T	1	1	13

For the processing sequence R – P – S – T – Q, total tardiness is _____.

Correct Answer :

6

Question Number : 64 Question Type : NAT

In a time study experiment, observed time is 15 minutes, operator rating is 90, personal need allowance is 4%, fatigue allowance is 3%, contingency allowance for work is 3% and contingency allowance for delay is 2%. The total work content, in minutes, is _____.

Correct Answer :

14 to 15

Question Number : 65 Question Type : MCQ

www.admission.aglasem.com

There are three alternatives to meet the demand of a product.

Alternative I: Manufacture using a process P
Alternative II: Manufacture using a process Q
Alternative III: Buy the product from a vendor

The costs associated with each alternative is given below:

Cost	Alternative I	Alternative II	Alternative III
Fixed cost	*Rs.* 100,000	*Rs.* 190,000	
Variable cost (per unit)	*Rs.* 75	*Rs.* 60	
Purchase price (per unit)			*Rs.* 87.50

Alternative I is cheaper compared to Alternative II when the demand is

(A) 8500
(B) above 8000
(C) 6500
(D) below 6000

Options :

1. ✖ A
2. ✖ B
3. ✖ C
4. ✔ D

www.admission.aglasem.com