Graduate Aptitude Test in Engineering

Notations :

1.Options shown in green color and with ✔ icon are correct.

2.Options shown in red color and with ✖ icon are incorrect.

Question Paper Name: ME: MECHANICAL ENGINEERING 31st Jan Shift2
Number of Questions: 65
Total Marks: 100.0

Wrong answer for MCQ will result in negative marks, (-1/3) for 1 mark Questions and (-2/3) for 2 marks Questions.

General Aptitude

Number of Questions: 10
Section Marks: 15.0

Q.1 to Q.5 carry 1 mark each & Q.6 to Q.10 carry 2 marks each.

www.admission.aglasem.com

Question Number : 1 Question Type : MCQ

Choose the appropriate word/phrase, out of the four options given below, to complete the following sentence:

Dhoni, as well as the other team members of Indian team, _____present on the occasion.

(A) were (B) was (C) has (D) have

Options :

1. ✖ A
2. ✔ B
3. ✖ C
4. ✖ D

Question Number : 2 Question Type : MCQ

Choose the word most similar in meaning to the given word:

Awkward

(A) Inept (B) Graceful (C) Suitable (D) Dreadful

Options :

1. ✔ A
2. ✖ B
3. ✖ C
4. ✖ D

Question Number : 3 Question Type : MCQ

What is the adverb for the given word below?

Misogynous

(A) Misogynousness (B) Misogynity (C) Misogynously (D) Misogynous

Options :

1. ✖ A
2. ✖ B
3. ✔ C
4. ✖ D

Question Number : 4 Question Type : MCQ

An electric bus has onboard instruments that report the total electricity consumed since the start of the trip as well as the total distance covered. During a single day of operation, the bus travels on stretches M, N, O, and P, in that order. The cumulative distances travelled and the corresponding electricity consumption are shown in the Table below:

Stretch	Cumulative distance (km)	Electricity used (kWh)
M	20	12
N	45	25
O	75	45
P	100	57

The stretch where the electricity consumption per km is minimum is

(A) M (B) N (C) O (D) P

Options :

1. ✖ A
2. ✖ B
3. ✖ C
4. ✔ D

Question Number : 5 Question Type : MCQ

Ram and Ramesh appeared in an interview for two vacancies in the same department. The probability of Ram's selection is 1/6 and that of Ramesh is 1/8. What is the probability that only one of them will be selected?

(A) 47/48
(B) 1/4
(C) 13/48
(D) 35/48

Options :

1. ✖ A
2. ✔ B
3. ✖ C
4. ✖ D

www.admission.aglasem.com

Question Number : 6 Question Type : MCQ

In the following sentence certain parts are underlined and marked P, Q, and R. One of the parts may contain certain error or may not be acceptable in standard written communication. Select the part containing an error. Choose D as your answer if there is no error.

The student corrected all the errors (P) that the instructor marked (Q) on the answer book (R).

(A) P (B) Q (C) R (D) No Error

Options :

1. ✖ A
2. ✔ B
3. ✖ C
4. ✖ D

Question Number : 7 Question Type : MCQ

Given below are two statements followed by two conclusions. Assuming these statements to be true, decide which one logically follows.

Statements:

I. All film stars are playback singers.
II. All film directors are film stars.

Conclusions:

I. All film directors are playback singers.
II. Some film stars are film directors.

(A) Only conclusion I follows.
(B) Only conclusion II follows.
(C) Neither conclusion I nor II follows.
(D) Both conclusions I and II follow.

Options :

1. ✖ A
2. ✖ B
3. ✖ C
4. ✔ D

www.admission.aglasem.com

Question Number : 8 Question Type : NAT

A tiger is 50 leaps of its own behind a deer. The tiger takes 5 leaps per minute to the deer's 4. If the tiger and the deer cover 8 metre and 5metre per leap respectively, what distance in metres will the tiger have to run before it catches the deer?

Correct Answer :

800

Question Number : 9 Question Type : MCQ

If $a^2 + b^2 + c^2 = 1$, then $ab + bc + ac$ lies in the interval

(A) [1, 2/3]
(B) [−1/2, 1]
(C) [−1, 1/2]
(D) [2, −4]

Options :

1. ✖ A
2. ✔ B
3. ✖ C
4. ✖ D

Question Number : 10 Question Type : MCQ

Lamenting the gradual sidelining of the arts in school curricula, a group of prominent artists wrote to the Chief Minister last year, asking him to allocate more funds to support arts education in schools. However, no such increase has been announced in this year's Budget. The artists expressed their deep anguish at their request not being approved, but many of them remain optimistic about funding in the future.

Which of the statement(s) below is/are logically valid and can be inferred from the above statements?

(i) The artists expected funding for the arts to increase this year.
(ii) The Chief Minister was receptive to the idea of increasing funding for the arts.
(iii) The Chief Minister is a prominent artist.
(iv) Schools are giving less importance to arts education nowadays.

(A) (iii) and (iv) (B) (i) and (iv) (C) (i), (ii) and (iv) (D) (i) and (iii)

Options :

1. ✖ A
2. ✔ B
3. ✖ C
4. ✖ D

www.admission.aglasem.com

Mechanical Engineering

Number of Questions:	55
Section Marks:	85.0

Q.11 to Q.35 carry 1 mark each & Q.36 to Q.65 carry 2 marks each.

Question Number : 11 Question Type : MCQ

If any two columns of a determinant $P=\begin{vmatrix} 4 & 7 & 8 \\ 3 & 1 & 5 \\ 9 & 6 & 2 \end{vmatrix}$ are interchanged, which one of the following statements regarding the value of the determinant is **CORRECT**?

(A) Absolute value remains unchanged but sign will change.
(B) Both absolute value and sign will change.
(C) Absolute value will change but sign will not change.
(D) Both absolute value and sign will remain unchanged.

Options :

1. ✔ A
2. ✖ B
3. ✖ C
4. ✖ D

Question Number : 12 Question Type : MCQ

Among the four normal distributions with probability density functions as shown below, which one has the lowest variance?

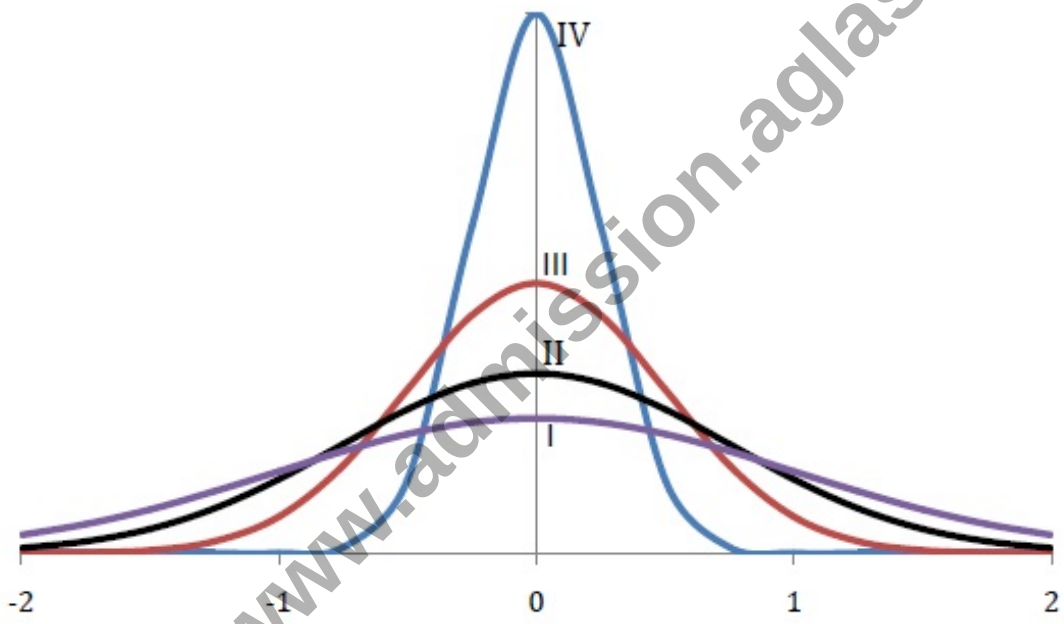

(A) I (B) II (C) III (D) IV

Options :

1. ✖ A
2. ✖ B
3. ✖ C
4. ✔ D

Question Number : 13 Question Type : NAT

Simpson's $\frac{1}{3}$ rule is used to integrate the function $f(x) = \frac{3}{5}x^2 + \frac{9}{5}$ between $x = 0$ and $x = 1$ using the least number of equal sub-intervals. The value of the integral is _____

www.admission.aglasem.com

Correct Answer :
2

Question Number : 14 Question Type : MCQ

The value of $\lim_{x \to 0} \frac{1-\cos(x^2)}{2x^4}$ is

(A) 0 (B) $\frac{1}{2}$ (C) $\frac{1}{4}$ (D) undefined

Options :
1. ✖ A
2. ✖ B
3. ✔ C
4. ✖ D

Question Number : 15 Question Type : MCQ

Given two complex numbers $z_1 = 5 + (5\sqrt{3})i$ and $z_2 = \frac{2}{\sqrt{3}} + 2i$, the argument of $\frac{z_1}{z_2}$ in degrees is

(A) 0 (B) 30 (C) 60 (D) 90

Options :
1. ✔ A
2. ✖ B
3. ✖ C
4. ✖ D

Question Number : 16 Question Type : MCQ

Consider fully developed flow in a circular pipe with negligible entrance length effects. Assuming the mass flow rate, density and friction factor to be constant, if the length of the pipe is doubled and the diameter is halved, the head loss due to friction will increase by a factor of

(A) 4 (B) 16 (C) 32 (D) 64

Options :
1. ✖ A
2. ✖ B
3. ✖ C
4. ✔ D

Question Number : 17 Question Type : MCQ

www.admission.aglasem.com

The Blasius equation related to boundary layer theory is a

(A) third-order linear partial differential equation
(B) third-order nonlinear partial differential equation
(C) second-order nonlinear ordinary differential equation
(D) third-order nonlinear ordinary differential equation

Options :

1. ✖ A
2. ✖ B
3. ✖ C
4. ✔ D

Question Number : 18 Question Type : MCQ

For flow of viscous fluid over a flat plate, if the fluid temperature is the same as the plate temperature, the thermal boundary layer is

(A) thinner than the velocity boundary layer
(B) thicker than the velocity boundary layer
(C) of the same thickness as the velocity boundary layer
(D) not formed at all

Options :

1. ✖ A
2. ✖ B
3. ✖ C
4. ✔ D

Question Number : 19 Question Type : MCQ

For an ideal gas with constant values of specific heats, for calculation of the specific enthalpy,

(A) it is sufficient to know only the temperature
(B) both temperature and pressure are required to be known
(C) both temperature and volume are required to be known
(D) both temperature and mass are required to be known

Options :

1. ✔ A
2. ✖ B
3. ✖ C
4. ✖ D

Question Number : 20 Question Type : NAT

A Carnot engine (CE-1) works between two temperature reservoirs A and B, where $T_A = 900$ K and $T_B = 500$ K. A second Carnot engine (CE-2) works between temperature reservoirs B and C, where $T_C = 300$ K. In each cycle of CE-1 and CE-2, all the heat rejected by CE-1 to reservoir B is used by CE-2. For one cycle of operation, if the net Q absorbed by CE-1 from reservoir A is 150 MJ, the net heat rejected to reservoir C by CE-2 (in MJ) is _____

www.admission.aglasem.com

Correct Answer :
50

Question Number : 21 Question Type : NAT

Air enters a diesel engine with a density of 1.0 kg/m^3. The compression ratio is 21. At steady state, the air intake is 30×10^{-3} kg/s and the net work output is 15 kW. The mean effective pressure (in kPa) is _____

Correct Answer :
525

Question Number : 22 Question Type : NAT

A stream of moist air (mass flow rate = 10.1 kg/s) with humidity ratio of 0.01 $\frac{\text{kg}}{\text{kg dry air}}$ mixes with a second stream of superheated water vapour flowing at 0.1 kg/s. Assuming proper and uniform mixing with no condensation, the humidity ratio of the final stream (in $\frac{\text{kg}}{\text{kg dry air}}$) is _____

Correct Answer:
0.02

Question Number : 23 Question Type : NAT

A wheel of radius r rolls without slipping on a horizontal surface shown below. If the velocity of point P is 10 m/s in the horizontal direction, the magnitude of velocity of point Q (in m/s) is _____

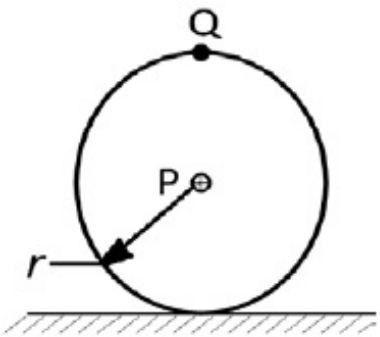

Correct Answer :
20

Question Number : 24 Question Type : MCQ

www.admission.aglasem.com

Consider a slider crank mechanism with nonzero masses and inertia. A constant torque τ is applied on the crank as shown in the figure. Which of the following plots best resembles variation of crank angle, θ versus time

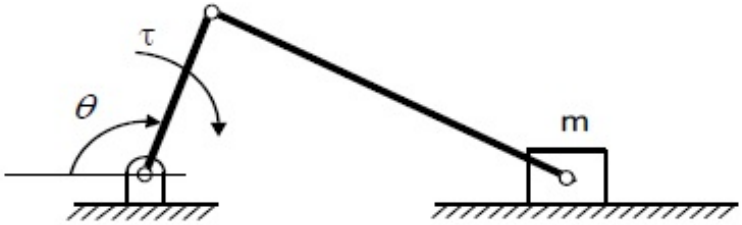

(A)

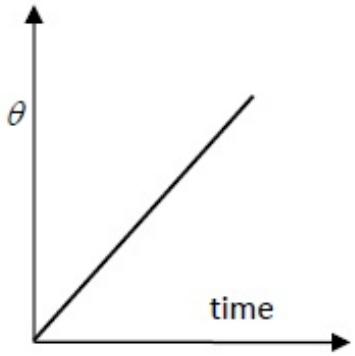

(B)

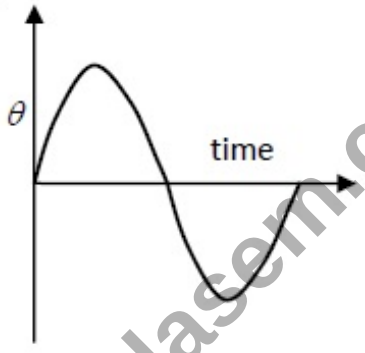

(C)

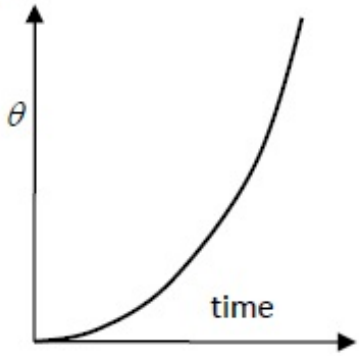

(D)

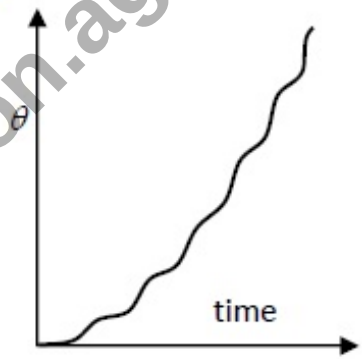

www.admission.aglasem.com

Options :

1. ✖ A
2. ✖ B
3. ✖ C
4. ✔ D

Question Number : 25 Question Type : NAT

Consider a stepped shaft subjected to a twisting moment applied at B as shown in the figure. Assume shear modulus, G = 77 GPa. The angle of twist at C (in degrees) is _____

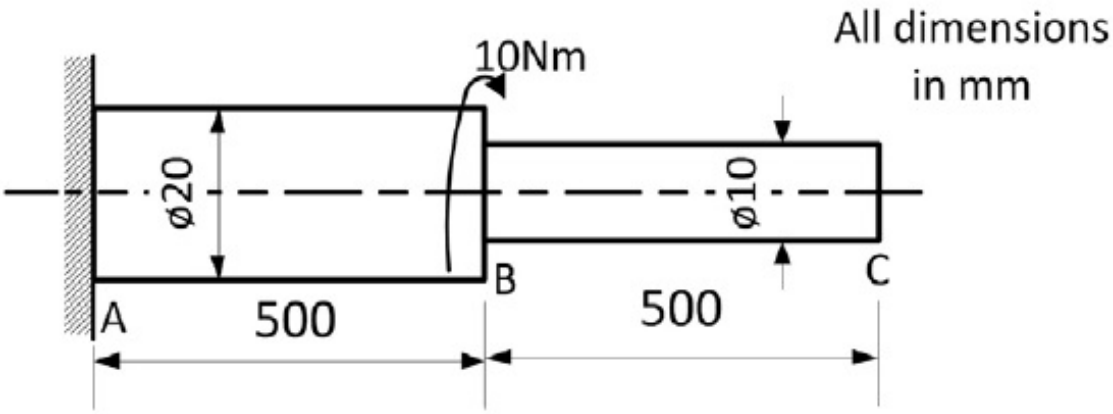

Correct Answer:

0.22 to 0.25

Question Number : 26 Question Type : NAT

Two identical trusses support a load of 100 N as shown in the figure. The length of each truss is 1.0 m; cross-sectional area is 200 mm^2; Young's modulus E = 200 GPa. The force in the truss AB (in N) is _____

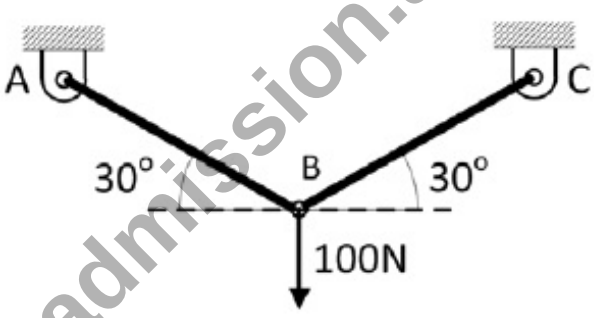

www.admission.aglasem.com

Correct Answer :

100

Question Number : 27 Question Type : NAT

Consider a steel (Young's modulus E = 200 GPa) column hinged on both sides. Its height is 1.0 m and cross-section is 10 mm × 20 mm. The lowest Euler critical buckling load (in N) is _____

Correct Answer :

3285 to 3295

Question Number : 28 Question Type : NAT

A swimmer can swim 10 km in 2 hours when swimming along the flow of a river. While swimming against the flow, she takes 5 hours for the same distance. Her speed in still water (in km/h) is _____

Correct Answer :

3.5

Question Number : 29 Question Type : MCQ

Which one of the following is the most conservative fatigue failure criterion?

(A) Soderberg
(B) Modified Goodman
(C) ASME Elliptic
(D) Gerber

Options :

1. ✔ A
2. ✖ B
3. ✖ C
4. ✖ D

Question Number : 30 Question Type : MCQ

Which one of the following types of stress-strain relationship best describes the behaviour of brittle materials, such as ceramics and thermosetting plastics. (σ = stress and ε = strain)?

(A)

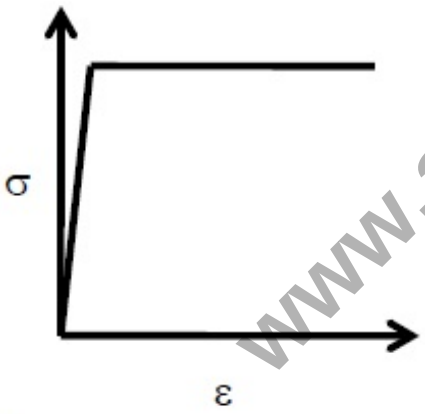

(B)

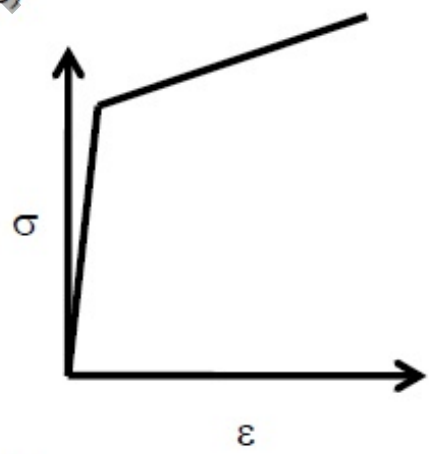

(C)

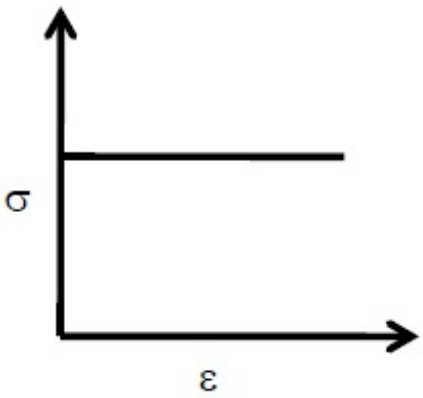

(D)

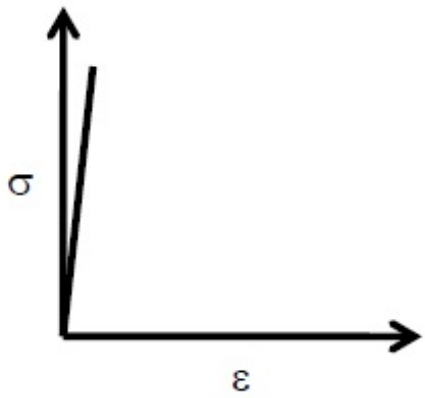

Options :

www.admission.aglasem.com

1. ✖ A
2. ✖ B
3. ✖ C
4. ✔ D

Question Number : 31 Question Type : MCQ

Match the following products with preferred manufacturing processes:

Product		Process	
P	Rails	1	Blow molding
Q	Engine crankshaft	2	Extrusion
R	Aluminium channels	3	Forging
S	PET water bottles	4	Rolling

(A) P-4, Q-3, R-1, S-2
(B) P-4, Q-3, R-2, S-1
(C) P-2, Q-4, R-3, S-1
(D) P-3, Q-4, R-2, S-1

Options :

1. ✖ A
2. ✔ B
3. ✖ C
4. ✖ D

Question Number : 32 Question Type : MCQ

Holes of diameter $25.0^{+0.040}_{+0.020}$ mm are assembled interchangeably with the pins of diameter $25.0^{+0.005}_{-0.008}$ mm. The minimum clearance in the assembly will be

(A) 0.048 mm
(B) 0.015 mm
(C) 0.005 mm
(D) 0.008 mm

Options :

1. ✖ A
2. ✔ B
3. ✖ C
4. ✖ D

Question Number : 33 Question Type : NAT

Under certain cutting conditions, doubling the cutting speed reduces the tool life to $\left(\frac{1}{16}\right)^{th}$ of the original. Taylor's tool life index (n) for this tool-workpiece combination will be _____

Correct Answer :

0.25

www.admission.aglasem.com

Question Number : 34 Question Type : MCQ

In a linear arc welding process, the heat input per unit length is inversely proportional to

(A) welding current
(B) welding voltage
(C) welding speed
(D) duty cycle of the power source

Options :

1. ✖ A
2. ✖ B
3. ✔ C
4. ✖ D

Question Number : 35 Question Type : MCQ

The function of interpolator in a CNC machine controller is to

(A) control spindle speed
(B) coordinate feed rates of axes
(C) control tool rapid approach speed
(D) perform Miscellaneous (M) functions (tool change, coolant control etc.)

Options :

1. ✖ A
2. ✔ B
3. ✖ C
4. ✖ D

www.admission.aglasem.com

Question Number : 36 Question Type : NAT

Consider a spatial curve in three-dimensional space given in parametric form by

$x(t) = \cos t,\ \ y(t) = \sin t,\ z(t) = \frac{2}{\pi}t,\ \ 0 \le t \le \frac{\pi}{2}$.

The length of the curve is _____

Correct Answer :

1.85 to 1.87

Question Number : 37 Question Type : NAT

Consider an ant crawling along the curve $(x-2)^2 + y^2 = 4$, where x and y are in meters. The ant starts at the point (4, 0) and moves counter-clockwise with a speed of 1.57 meters per second. The time taken by the ant to reach the point (2, 2) is (in seconds) _____

Correct Answer :
1.9 to 2.1

Question Number : 38 Question Type : MCQ

Find the solution of $\frac{d^2y}{dx^2} = y$ which passes through the origin and the point $\left(\ln 2, \frac{3}{4}\right)$.

(A) $y = \frac{1}{2}e^x - e^{-x}$

(B) $y = \frac{1}{2}(e^x + e^{-x})$

(C) $y = \frac{1}{2}(e^x - e^{-x})$

(D) $y = \frac{1}{2}e^x + e^{-x}$

Options :
1. ✖ A
2. ✖ B
3. ✔ C
4. ✖ D

Question Number : 39 Question Type : MCQ

The probability of obtaining at least two "SIX" in throwing a fair dice 4 times is

(A) 425/432 (B) 19/144 (C) 13/144 (D) 125/432

Options :
1. ✖ A
2. ✔ B
3. ✖ C
4. ✖ D

Question Number : 40 Question Type : MCQ

www.admission.aglasem.com

In the assembly shown below, the part dimensions are:

$L_1 = 22.0^{\pm 0.01}$ mm,

$L_2 = L_3 = 10.0^{\pm 0.005}$ mm.

Assuming the normal distribution of part dimensions, the dimension L_4 in mm for assembly condition would be:

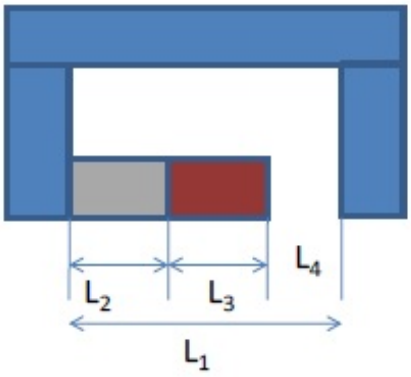

(A) $2.0^{\pm 0.008}$

(B) $2.0^{\pm 0.012}$

(C) $2.0^{\pm 0.016}$

(D) $2.0^{\pm 0.020}$

Options :

1. ✖ A
2. ✔ B
3. ✖ C
4. ✖ D

www.admission.aglasem.com

Question Number : 41 Question Type : NAT

A DC welding power source has a linear voltage-current (*V-I*) characteristic with open circuit voltage of 80 V and a short circuit current of 300 A. For maximum arc power, the current (in Amperes) should be set as_____

Correct Answer:

149 to 151

Question Number : 42 Question Type : MCQ

A triangular facet in a CAD model has vertices: P1(0,0,0); P2(1,1,0) and P3(1,1,1). The area of the facet is

(A) 0.500
(B) 0.707
(C) 1.414
(D) 1.732

Options :

1. ✖ A
2. ✔ B
3. ✖ C
4. ✖ D

Question Number : 43 Question Type : MCQ

Following data refers to the activities of a project, where, node 1 refers to the start and node 5 refers to the end of the project.

Activity	Duration (days)
1-2	2
2-3	1
4-3	3
1-4	3
2-5	3
3-5	2
4-5	4

The critical path (CP) in the network is

(A) 1-2-3-5
(B) 1-4-3-5
(C) 1-2-3-4-5
(D) 1-4-5

Options :

1. ✖ A
2. ✔ B
3. ✖ C
4. ✖ D

Question Number : 44 Question Type : NAT

For a canteen, the actual demand for disposable cups was 500 units in January and 600 units in February. The forecast for the month of January was 400 units. The forecast for the month of March considering smoothing coefficient as 0.75 is _____

Correct Answer:

568 to 570

Question Number : 45 Question Type : NAT

An orthogonal turning operation is carried out under the following conditions: rake angle = 5°; spindle rotational speed = 400 rpm; axial feed = 0.4 m/min and radial depth of cut = 5 mm. The chip thickness, t_c, is found to be 3 mm. The shear angle (in degrees) in this turning process is_____

www.admission.aglasem.com

Correct Answer :
18.5 to 19.0

Question Number : 46 Question Type : MCQ

The solidification time of a casting is proportional to $\left(\frac{V}{A}\right)^2$, where V is the volume of the casting and A is the total casting surface area losing heat. Two cubes of same material and size are cast using sand casting process. The top face of one of the cubes is completely insulated. The ratio of the solidification time for the cube with top face insulated to that of the other cube is

(A) $\frac{25}{36}$ (B) $\frac{36}{25}$ (C) 1 (D) $\frac{6}{5}$

Options :
1. ✖ A
2. ✔ B
3. ✖ C
4. ✖ D

Question Number : 47 Question Type : NAT

In a slab rolling operation, the maximum thickness reduction (Δh_{max}) is given by $\Delta h_{max} = \mu^2 R$, where R is the radius of the roll and μ is the coefficient of friction between the roll and the sheet. If $\mu = 0.1$, the maximum angle subtended by the deformation zone at the centre of the roll (bite angle in degrees) is _____

Correct Answer :
5.6 to 5.8

Question Number : 48 Question Type : MCQ

Considering massless rigid rod and small oscillations, the natural frequency (in rad/s) of vibration of the system shown in the figure is

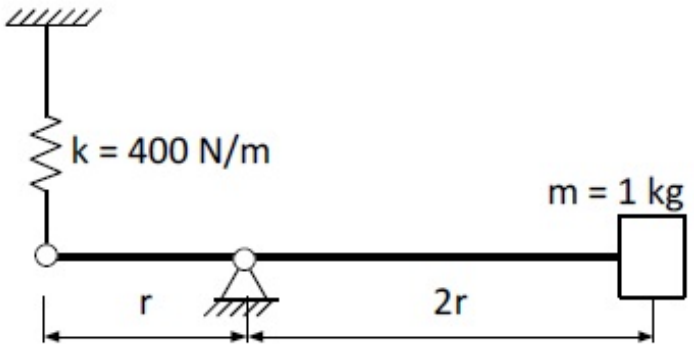

(A) $\sqrt{\frac{400}{1}}$ (B) $\sqrt{\frac{400}{2}}$ (C) $\sqrt{\frac{400}{3}}$ (D) $\sqrt{\frac{400}{4}}$

www.admission.aglasem.com

Options :

1. ✖ A
2. ✖ B
3. ✖ C
4. ✔ D

Question Number : 49 Question Type : MCQ

For the truss shown in figure, the magnitude of the force in member ***PR*** and the support reaction at ***R*** are respectively

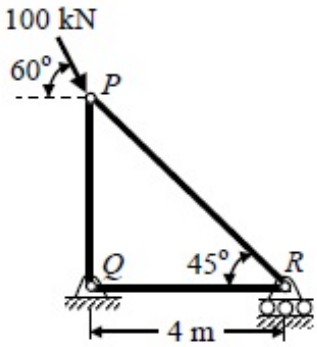

(A) 122.47 kN and 50 kN
(B) 70.71 kN and 100 kN
(C) 70.71 kN and 50 kN
(D) 81.65 kN and 100 kN

Options :

1. ✖ A
2. ✖ B
3. ✔ C
4. ✖ D

Question Number : 50 Question Type : NAT

A ball of mass 0.1 kg, initially at rest, is dropped from height of 1 m. Ball hits the ground and bounces off the ground. Upon impact with the ground, the velocity reduces by 20%. The height (in m) to which the ball will rise is _____

www.admission.aglasem.com

Correct Answer:

0.64

Question Number : 51 Question Type : MCQ

A pinion with radius r_1, and inertia I_1 is driving a gear with radius r_2 and inertia I_2. Torque τ_1 is applied on pinion. The following are free body diagrams of pinion and gear showing important forces (F_1 and F_2) of interaction. Which of the following relations hold true?

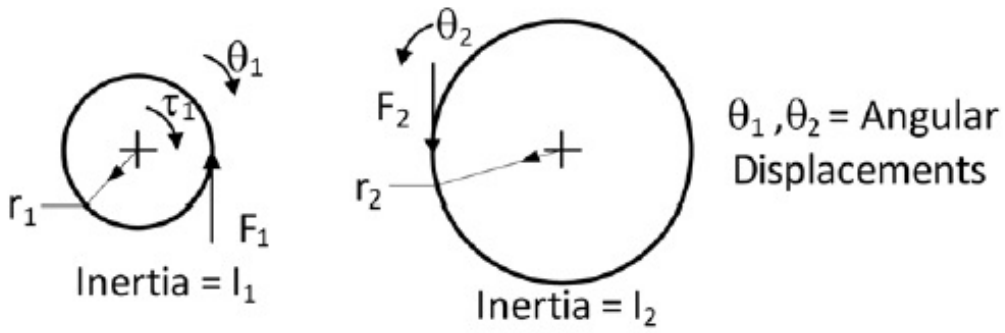

(A) $F_1 \neq F_2;\ \tau_1 = I_1\ddot{\theta}_1; F_2 = I_2\frac{r_1}{r_2^2}\ddot{\theta}_1$

(B) $F_1 = F_2;\ \tau_1 = \left[I_1 + I_2\left(\frac{r_1}{r_2}\right)^2\right]\ddot{\theta}_1; F_2 = I_2\frac{r_1}{r_2^2}\ddot{\theta}_1$

(C) $F_1 = F_2;\ \tau_1 = I_1\ddot{\theta}_1; F_2 = I_2\frac{1}{r_2}\ddot{\theta}_2$

(D) $F_1 \neq F_2;\ \tau_1 = \left[I_1 + I_2\left(\frac{r_1}{r_2}\right)^2\right]\ddot{\theta}_1; F_2 = I_2\frac{1}{r_2}\ddot{\theta}_2$

Options :

1. ✖ A
2. ✔ B
3. ✖ C
4. ✖ D

Question Number : 52 Question Type : MCQ

A mobile phone has a small motor with an eccentric mass used for vibrator mode. The location of the eccentric mass on motor with respect to center of gravity (CG) of the mobile and the rest of the dimensions of the mobile phone are shown. The mobile is kept on a flat horizontal surface.

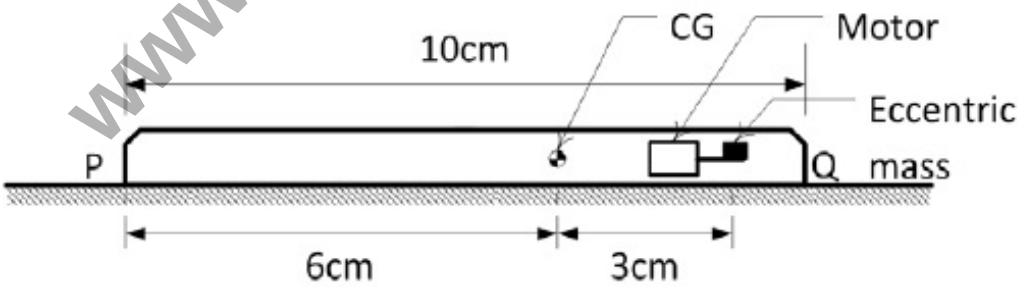

Given in addition that the eccentric mass = 2 grams, eccentricity = 2.19 mm, mass of the mobile = 90 grams, g = 9.81 m/s^2. Uniform speed of the motor in RPM for which the mobile will get just lifted off the ground at the end Q is approximately

(A) 3000 (B) 3500 (C) 4000 (D) 4500

Options :

1. ✖ A
2. ✔ B
3. ✖ C

www.admission.aglasem.com

4. ✖ D

Question Number : 53 Question Type : MCQ

A machine element is subjected to the following bi-axial state of stress: $\sigma_x = 80$ MPa; $\sigma_y = 20$ MPa; $\tau_{xy} = 40$ MPa. If the shear strength of the material is 100 MPa, the factor of safety as per Tresca's maximum shear stress theory is

(A) 1.0 (B) 2.0 (C) 2.5 (D) 3.3

Options :

1. ✖ A
2. ✔ B
3. ✖ C
4. ✖ D

Question Number : 54 Question Type : NAT

A cantilever beam with flexural rigidity of 200 N.m^2 is loaded as shown in the figure. The deflection (in mm) at the tip of the beam is _____

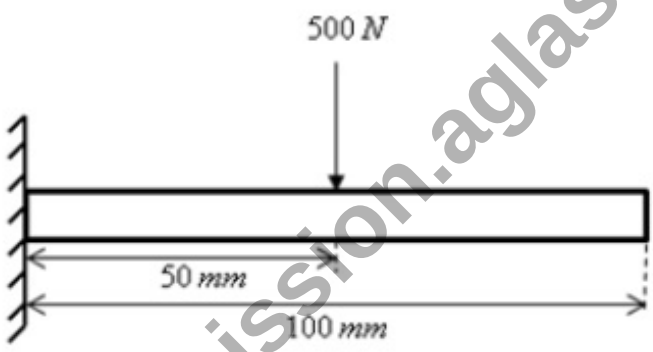

www.admission.aglasem.com

Correct Answer :

0.24 to 0.28

Question Number : 55 Question Type : NAT

A precision instrument package (m = 1 kg) needs to be mounted on a surface vibrating at 60 Hz. It is desired that only 5% of the base surface vibration amplitude be transmitted to the instrument. Assume that the isolation is designed with its natural frequency significantly lesser than 60 Hz, so that the effect of damping may be ignored. The stiffness (in N/m) of the required mounting pad is _____

Correct Answer :

6750 to 7150

Question Number : 56 Question Type : NAT

A horizontal plate has been joined to a vertical post using four rivets arranged as shown in the figure. The magnitude of the load on the worst loaded rivet (in N) is _____

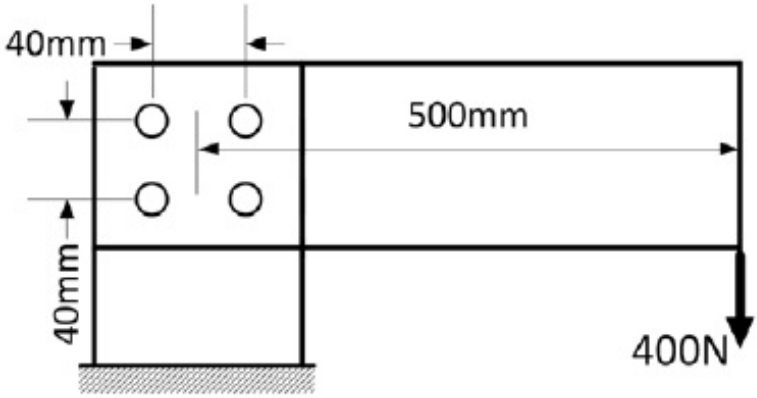

Correct Answer :

1835 to 1845

Question Number : 57 Question Type : MCQ

For flow through a pipe of radius R, the velocity and temperature distribution are as follows:

$u(r,x) = C_1$, and $T(r,x) = C_2\left[1-\left(\frac{r}{R}\right)^3\right]$, where C_1 and C_2 are constants.

The bulk mean temperature is given by $T_m = \frac{2}{U_m R^2}\int_0^R u(r,x)T(r,x)\,r\,dr$, with U_m being the mean velocity of flow. The value of T_m is

(A) $\frac{0.5C_2}{U_m}$ (B) $0.5C_2$ (C) $0.6C_2$ (D) $\frac{0.6C_2}{U_m}$

Options :

1. ✖ A
2. ✖ B
3. ✔ C
4. ✖ D

Question Number : 58 Question Type : MCQ

www.admission.aglasem.com

Match the following pairs:

Equation		Physical Interpretation	
P	$\nabla \times \vec{V} = 0$	I	Incompressible continuity equation
Q	$\nabla \cdot \vec{V} = 0$	II	Steady flow
R	$\frac{D\vec{V}}{Dt} = 0$	III	Irrotational flow
S	$\frac{\partial \vec{V}}{\partial t} = 0$	IV	Zero acceleration of fluid particle

(A) P-IV, Q-I, R-II, S-III

(B) P-IV, Q-III, R-I, S-II

(C) P-III, Q-I, R-IV, S-II

(D) P-III, Q-I, R-II, S-IV

Options :

1. ✖ A
2. ✖ B
3. ✔ C
4. ✖ D

Question Number : 59 Question Type : NAT

The velocity field of an incompressible flow is given by $\mathbf{V} = (a_1x + a_2y + a_3z)\mathbf{i} + (b_1x + b_2y + b_3z)\mathbf{j} + (c_1x + c_2y + c_3z)\mathbf{k}$, where $a_1 = 2$ and $c_3 = -4$. The value of b_2 is _____

Correct Answer :

1.9 to 2.1

Question Number : 60 Question Type : MCQ

www.admission.aglasem.com

A 10 mm diameter electrical conductor is covered by an insulation of 2 mm thickness. The conductivity of the insulation is 0.08 W/m-K and the convection coefficient at the insulation surface is 10 W/m^2-K. Addition of further insulation of the same material will

(A) increase heat loss continuously
(B) decrease heat loss continuously
(C) increase heat loss to a maximum and then decrease heat loss
(D) decrease heat loss to a minimum and then increase heat loss

Options :

1. ✖ A
2. ✖ B
3. ✔ C
4. ✖ D

Question Number : 61 Question Type : NAT

Temperature of nitrogen in a vessel of volume 2 m^3 is 288 K. A U-tube manometer connected to the vessel shows a reading of 70 cm of mercury (level higher in the end open to atmosphere). The universal gas constant is 8314 J/kmol-K, atmospheric pressure is 1.01325 bar, acceleration due to gravity is 9.81 m/s^2 and density of mercury is 13600 kg/m^3. The mass of nitrogen (in kg) in the vessel is _____

Correct Answer :
4.4 to 4.6

Question Number : 62 Question Type : NAT

Air ($\rho = 1.2$ kg/m^{3}and kinematic viscosity, $\nu = 2 \times 10^{-5}$ m^2/s) with a velocity of 2 m/s flows over the top surface of a flat plate of length 2.5 m. If the average value of friction coefficient is $C_f = \frac{1.328}{\sqrt{Re_x}}$, the total drag force (in N) per unit width of the plate is _____

Correct Answer :
0.0158 to 0.0162

Question Number : 63 Question Type : NAT

Water ($\rho = 1000$ kg/m^3) flows through a venturimeter with inlet diameter 80 mm and throat diameter 40 mm. The inlet and throat gauge pressures are measured to be 400 kPa and 130 kPa respectively. Assuming the venturimeter to be horizontal and neglecting friction, the inlet velocity (in m/s) is _____

Correct Answer :

www.admission.aglasem.com

Question Number : 64 Question Type : NAT

A well insulated rigid container of volume 1 m^3 contains 1.0 kg of an ideal gas [C_p = 1000 J/(kg.K) and C_v = 800 J/(kg.K)] at a pressure of 10^5 Pa. A stirrer is rotated at constant rpm in the container for 1000 rotations and the applied torque is 100 N-m. The final temperature of the gas (in K) is _____

Correct Answer :

1283.4 to 1287.4

Question Number : 65 Question Type : NAT

Steam enters a well insulated turbine and expands isentropically throughout. At an intermediate pressure, 20 percent of the mass is extracted for process heating and the remaining steam expands isentropically to 9 kPa.

Inlet to turbine: P = 14 MPa, T = 560°C, h = 3486 kJ/kg, s = 6.6 kJ/(kg.K)
Intermediate stage: h = 2776 kJ/kg
Exit of turbine: P = 9 kPa, h_f = 174 kJ/kg, h_g = 2574 kJ/kg, s_f = 0.6 kJ/(kg.K), s_g = 8.1 kJ/(kg.K)

If the flow rate of steam entering the turbine is 100 kg/s, then the work output (in MW) is _____

Correct Answer :

123.56 to 127.56

www.admission.aglasem.com