Graduate Aptitude Test in Engineering

Notations :

1.Options shown in green color and with ✔ icon are correct.

2.Options shown in red color and with ✖ icon are incorrect.

Question Paper Name: ME : MECHANICAL ENGINEERING 1st Feb Shift1
Number of Questions: 65
Total Marks: 100.0

Wrong answer for MCQ will result in negative marks, (-1/3) for 1 mark Questions and (-2/3) for 2 marks Questions.

General Aptitude

Number of Questions: 10
Section Marks: 15.0

Q.1 to Q.5 carry 1 mark each & Q.6 to Q.10 carry 2 marks each.

www.admission.aglasem.com

Question Number : 1 Question Type : MCQ

Choose the most appropriate word from the options given below to complete the following sentence.

If the athlete had wanted to come first in the race, he _____ several hours every day.

(A) should practise (B) should have practised
(C) practised (D) should be practising

Options :

1. ✖ A
2. ✔ B
3. ✖ C
4. ✖ D

Question Number : 2 Question Type : MCQ

Choose the most suitable one word substitute for the following expression:

Connotation of a road or way

(A) Pertinacious (B) Viaticum (C) Clandestine (D) Ravenous

Options :

1. ✖ A
2. ✔ B
3. ✖ C
4. ✖ D

Question Number : 3 Question Type : MCQ

Choose the correct verb to fill in the blank below:

Let us _____.

(A) introvert (B) alternate (C) atheist (D) altruist

Options :

1. ✖ A
2. ✔ B
3. ✖ C
4. ✖ D

Question Number : 4 Question Type : MCQ

Find the missing sequence in the letter series below:
A, CD, GHI, ?, UVWXY

(A) LMN (B) MNO (C) MNOP (D) NOPQ

Options :

1. ✖ A
2. ✖ B
3. ✔ C
4. ✖ D

Question Number : 5 Question Type : MCQ

If $x > y > 1$, which of the following must be true?

i. $\ln x > \ln y$ ii. $e^x > e^y$ iii. $y^x > x^y$ iv. $\cos x > \cos y$

(A) (i) and (ii) (B) (i) and (iii)
(C) (iii) and (iv) (D) (ii) and (iv)

Options :

1. ✔ A
2. ✖ B
3. ✖ C
4. ✖ D

www.admission.aglasem.com

Question Number : 6 Question Type : MCQ

Ram and Shyam shared a secret and promised to each other that it would remain between them. Ram expressed himself in one of the following ways as given in the choices below. Identify the correct way as per standard English.

(A) It would remain between you and me.
(B) It would remain between I and you.
(C) It would remain between you and I.
(D) It would remain with me.

Options :

1. ✔ A

2. ✖ B
3. ✖ C
4. ✖ D

Question Number : 7 Question Type : MCQ

In the following question, the first and the last sentence of the passage are in order and numbered 1 and 6. The rest of the passage is split into 4 parts and numbered as 2, 3, 4, and 5. These 4 parts are not arranged in proper order. Read the sentences and arrange them in a logical sequence to make a passage and choose the correct sequence from the given options.

1. On Diwali, the family rises early in the morning.
2. The whole family, including the young and the old enjoy doing this.
3. Children let off fireworks later in the night with their friends.
4. At sunset, the lamps are lit and the family performs various rituals.
5. Father, mother, and children visit relatives and exchange gifts and sweets.
6. Houses look so pretty with lighted lamps all around.

(A) 2,5,3,4 (B) 5,2,4,3 (C) 3,5,4,2 (D) 4,5,2,3

Options :

1. ✖ A
2. ✔ B
3. ✖ C
4. ✖ D

Question Number : 8 Question Type : NAT

From a circular sheet of paper of radius 30 cm, a sector of 10% area is removed. If the remaining part is used to make a conical surface, then the ratio of the radius and height of the cone is _____.

Correct Answer :

1.9 to 2.2

Question Number : 9 Question Type : MCQ

$\log \tan 1^\circ + \log \tan 2^\circ + \ldots\ldots + \log \tan 89^\circ$ is….

(A) 1 (B) $1/\sqrt{2}$ (C) 0 (D) -1

Options :

1. ✖ A
2. ✖ B
3. ✔ C
4. ✖ D

Question Number : 10 Question Type : MCQ

www.admission.aglasem.com

Ms. X will be in Bagdogra from 01/05/2014 to 20/05/2014 and from 22/05/2014 to 31/05/2014. On the morning of 21/05/2014, she will reach Kochi via Mumbai.

Which one of the statements below is logically valid and can be inferred from the above sentences?

(A) Ms. X will be in Kochi for one day, only in May.
(B) Ms. X will be in Kochi for only one day in May.
(C) Ms. X will be only in Kochi for one day in May.
(D) Only Ms. X will be in Kochi for one day in May.

Options :

1. ✖ A
2. ✔ B
3. ✖ C
4. ✖ D

Mechanical Engineering

Number of Questions:	55
Section Marks:	85.0

Q.11 to Q.35 carry 1 mark each & Q.36 to Q.65 carry 2 marks each.

Question Number : 11 Question Type : MCQ

At least one eigenvalue of a singular matrix is

(A) positive (B) zero (C) negative (D) imaginary

Options :

1. ✖ A
2. ✔ B
3. ✖ C
4. ✖ D

Question Number : 12 Question Type : MCQ

At $x = 0$, the function $f(x) = |x|$ has

(A) a minimum (B) a maximum
(C) a point of inflexion (D) neither a maximum nor minimum

Options :

1. ✔ A
2. ✖ B
3. ✖ C
4. ✖ D

Question Number : 13 Question Type : MCQ

www.admission.aglasem.com

Curl of vector $\mathbf{V}(x, y, z) = 2x^2\,\mathbf{i} + 3z^2\,\mathbf{j} + y^3\,\mathbf{k}$ at $x = y = z = 1$ is

(A) $-3\mathbf{i}$ (B) $3\mathbf{i}$ (C) $3\mathbf{i} - 4\mathbf{j}$ (D) $3\mathbf{i} - 6\mathbf{k}$

Options :

1. ✔ A
2. ✖ B
3. ✖ C
4. ✖ D

Question Number : 14 Question Type : MCQ

The Laplace transform of e^{i5t} where $i = \sqrt{-1}$, is

(A) $\dfrac{s-5i}{s^2-25}$ (B) $\dfrac{s+5i}{s^2+25}$ (C) $\dfrac{s+5i}{s^2-25}$ (D) $\dfrac{s-5i}{s^2+25}$

Options :

1. ✖ A
2. ✔ B
3. ✖ C
4. ✖ D

Question Number : 15 Question Type : NAT

Three vendors were asked to supply a very high precision component. The respective probabilities of their meeting the strict design specifications are 0.8, 0.7 and 0.5. Each vendor supplies one component. The probability that out of total three components supplied by the vendors, at least one will meet the design specification is _____

Correct answer :

0.96 to 0.98

Question Number : 16 Question Type : NAT

A small ball of mass 1 kg moving with a velocity of 12 m/s undergoes a direct central impact with a stationary ball of mass 2 kg. The impact is perfectly elastic. The speed (in m/s) of 2 kg mass ball after the impact will be _____

Correct Answer :

7.8 to 8.2

Question Number : 17 Question Type : NAT

www.admission.aglasem.com

A rod is subjected to a uni-axial load within linear elastic limit. When the change in the stress is 200 MPa, the change in the strain is 0.001. If the Poisson's ratio of the rod is 0.3, the modulus of rigidity (in GPa) is _____

Correct Answer :

76 to 78

Question Number : 18 Question Type : MCQ

A gas is stored in a cylindrical tank of inner radius 7 m and wall thickness 50 mm. The gage pressure of the gas is 2 MPa. The maximum shear stress (in MPa) in the wall is

(A) 35 (B) 70 (C) 140 (D) 280

Options :

1. ✖ A
2. ✖ B
3. ✔ C
4. ✖ D

Question Number : 19 Question Type : MCQ

The number of degrees of freedom of the planetary gear train shown in the figure is

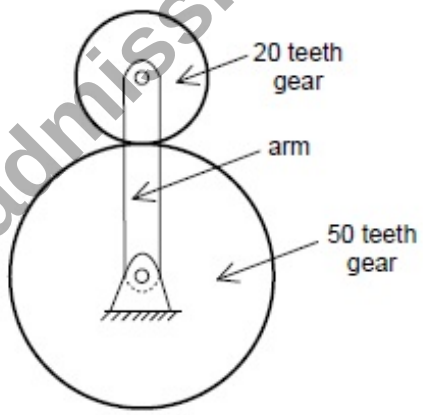

(A) 0 (B) 1 (C) 2 (D) 3

Options :

1. ✖ A
2. ✖ B
3. ✔ C
4. ✖ D

Question Number : 20 Question Type : NAT

www.admission.aglasem.com

In a spring-mass system, the mass is m and the spring constant is k. The critical damping coefficient of the system is 0.1 kg/s. In another spring-mass system, the mass is $2m$ and the spring constant is $8k$. The critical damping coefficient (in kg/s) of this system is _____

Correct Answer :
0.38 to 0.42

Question Number : 21 Question Type : NAT

The uniaxial yield stress of a material is 300 MPa. According to von Mises criterion, the shear yield stress (in MPa) of the material is _____

Correct Answer :
171 to 175

Question Number : 22 Question Type : MCQ

If the fluid velocity for a potential flow is given by $\mathbf{V}(x,y) = u(x,y)\mathbf{i} + v(x,y)\mathbf{j}$ with usual notations, then the slope of the potential line at (x,y) is

(A) $\frac{v}{u}$ (B) $-\frac{u}{v}$ (C) $\frac{v^2}{u^2}$ (D) $\frac{u}{v}$

Options :
1. ✖ A
2. ✔ B
3. ✖ C
4. ✖ D

Question Number : 23 Question Type : MCQ

Which of the following statements regarding a Rankine cycle with reheating are **TRUE**?
(i) increase in average temperature of heat addition
(ii) reduction in thermal efficiency
(iii) drier steam at the turbine exit

(A) only (i) and (ii) are correct
(B) only (ii) and (iii) are correct
(C) only (i) and (iii) are correct
(D) (i), (ii) and (iii) are correct

Options :
1. ✖ A
2. ✖ B
3. ✔ C
4. ✖ D

www.admission.aglasem.com

Question Number : 24 Question Type : MCQ

Within a boundary layer for a steady incompressible flow, the Bernoulli equation

(A) holds because the flow is steady
(B) holds because the flow is incompressible
(C) holds because the flow is transitional
(D) does not hold because the flow is frictional

Options :

1. ✖ A
2. ✖ B
3. ✖ C
4. ✔ D

Question Number : 25 Question Type : NAT

If a foam insulation is added to a 4 cm outer diameter pipe as shown in the figure, the critical radius of insulation (in cm) is _____

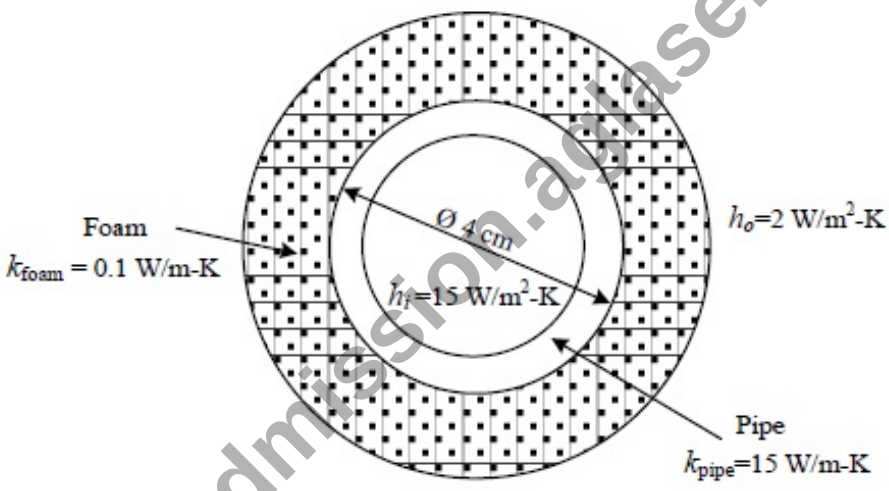

www.admission.aglasem.com

Correct Answer :

4.9 to 5.1

Question Number : 26 Question Type : MCQ

In the laminar flow of air (Pr = 0.7) over a heated plate, if δ and δ_T denote, respectively, the hydrodynamic and thermal boundary layer thicknesses, then

(A) $\delta = \delta_T$
(B) $\delta > \delta_T$
(C) $\delta < \delta_T$
(D) $\delta = 0$ but $\delta_T \neq 0$

Options :

1. ✖ A
2. ✖ B
3. ✔ C

4. ✖ D

Question Number : 27 Question Type : NAT

The COP of a Carnot heat pump operating between 6 °C and 37 °C is _____

Correct Answer :

9.8 to 10.2

Question Number : 28 Question Type : MCQ

The Van der Waals equation of state is $\left(p+\frac{a}{v^2}\right)(v-b)=RT$, where p is pressure, v is specific volume, T is temperature and R is characteristic gas constant. The SI unit of a is

(A) J/kg-K (B) m^3/kg (C) m^5/kg-s^2 (D) Pa/kg

Options :

1. ✖ A
2. ✖ B
3. ✔ C
4. ✖ D

Question Number : 29 Question Type : NAT

A rope-brake dynamometer attached to the crank shaft of an I.C. engine measures a brake power of 10 kW when the speed of rotation of the shaft is 400 rad/s. The shaft torque (in N-m) sensed by the dynamometer is _____

Correct Answer :

24 to 26

Question Number : 30 Question Type : SA

The atomic packing factor for a material with body centered cubic structure is _____

Correct Answer :

0.66 to 0.69

Question Number : 31 Question Type : MCQ

www.admission.aglasem.com

The primary mechanism of material removal in electrochemical machining (ECM) is

(A) chemical corrosion
(B) etching
(C) ionic dissolution
(D) spark erosion

Options :

1. ✖ A
2. ✖ B
3. ✔ C
4. ✖ D

Question Number : 32 Question Type : MCQ

Which one of the following statements is **TRUE**?

(A) The 'GO' gage controls the upper limit of a hole
(B) The 'NO GO' gage controls the lower limit of a shaft
(C) The 'GO' gage controls the lower limit of a hole
(D) The 'NO GO' gage controls the lower limit of a hole

Options :

1. ✖ A
2. ✖ B
3. ✔ C
4. ✖ D

Question Number : 33 Question Type : MCQ

During the development of a product, an entirely new process plan is made based on design logic, examination of geometry and tolerance information. This type of process planning is known as

(A) retrieval
(B) generative
(C) variant
(D) group technology based

Options :

1. ✖ A
2. ✔ B
3. ✖ C
4. ✖ D

Question Number : 34 Question Type : NAT

Annual demand of a product is 50000 units and the ordering cost is Rs. 7000 per order. Considering the basic economic order quantity model, the economic order quantity is 10000 units. When the annual inventory cost is minimized, the annual inventory holding cost (in Rs.) is _____

www.admission.aglasem.com

Correct Answer :
34000 to 36000

Question Number : 35 Question Type : MCQ

Sales data of a product is given in the following table:

Month	January	February	March	April	May
Number of units sold	10	11	16	19	25

Regarding forecast for the month of June, which one of the following statements is **TRUE**?

(A) Moving average will forecast a higher value compared to regression.
(B) Higher the value of order N, the greater will be the forecast value by moving average.
(C) Exponential smoothing will forecast a higher value compared to regression.
(D) Regression will forecast a higher value compared to moving average.

1. ✖ A
2. ✖ B
3. ✖ C
4. ✔ D

www.admission.aglasem.com

Question Number : 36 Question Type : MCQ

The chance of a student passing an exam is 20%. The chance of a student passing the exam and getting above 90% marks in it is 5%. GIVEN that a student passes the examination, the probability that the student gets above 90% marks is

(A) $\frac{1}{18}$ (B) $\frac{1}{4}$ (C) $\frac{2}{9}$ (D) $\frac{5}{18}$

Options :
1. ✖ A
2. ✔ B
3. ✖ C
4. ✖ D

Question Number : 37 Question Type : NAT

The surface integral $\iint_S \frac{1}{\pi}(9x\mathbf{i} - 3y\mathbf{j}) \bullet \mathbf{n}\, dS$ over the sphere given by $x^2 + y^2 + z^2 = 9$ is _____

Correct Answer :
214 to 218

Question Number : 38 Question Type : MCQ

Consider the following differential equation:

$$\frac{dy}{dt} = -5y; \quad \text{initial condition: } y = 2 \text{ at } t = 0.$$

The value of y at $t = 3$ is

(A) $-5e^{-10}$ (B) $2e^{-10}$ (C) $2e^{-15}$ (D) $-15e^{2}$

Options :

1. ✖ A
2. ✖ B
3. ✔ C
4. ✖ D

Question Number : 39 Question Type : NAT

The values of function $f(x)$ at 5 discrete points are given below:

x	0	0.1	0.2	0.3	0.4
$f(x)$	0	10	40	90	160

Using Trapezoidal rule with step size of 0.1, the value of $\int_0^{0.4} f(x)\,dx$ is _____

Correct Answer :

21.8 to 22.2

Question Number : 40 Question Type : NAT

The initial velocity of an object is 40 m/s. The acceleration a of the object is given by the following expression:

$$a = -0.1v,$$

where v is the instantaneous velocity of the object. The velocity of the object after 3 seconds will be _____

Correct Answer :

29.5 to 29.7

Question Number : 41 Question Type : MCQ

www.admission.aglasem.com

A cantilever beam OP is connected to another beam PQ with a pin joint as shown in the figure. A load of 10 kN is applied at the mid-point of PQ. The magnitude of bending moment (in kN-m) at fixed end O is

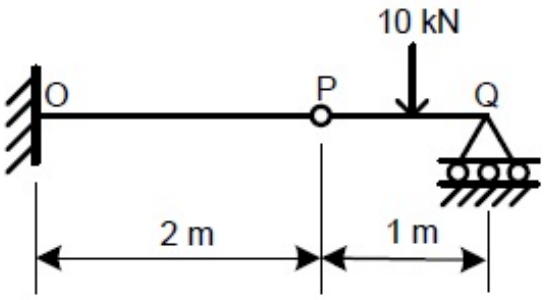

(A) 2.5 (B) 5 (C) 10 (D) 25

Options :

1. ✖ A
2. ✖ B
3. ✔ C
4. ✖ D

Question Number : 42 Question Type : MCQ

For the truss shown in the figure, the magnitude of the force (in kN) in the member SR is

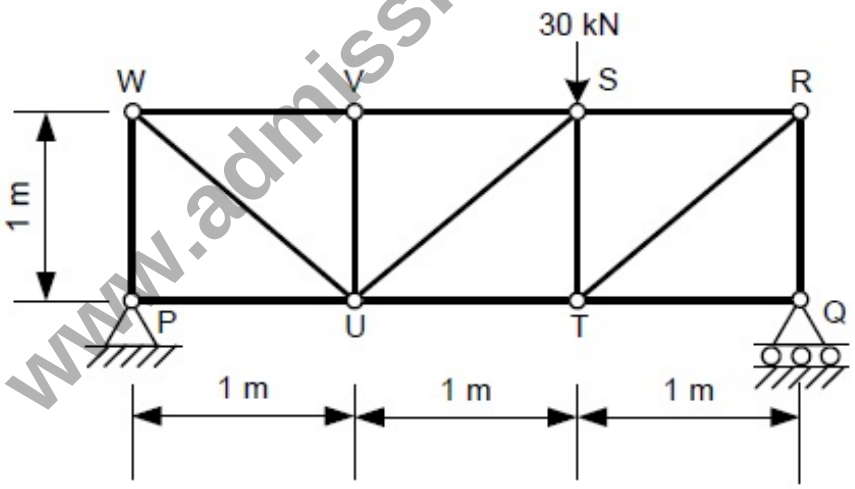

(A) 10 (B) 14.14 (C) 20 (D) 28.28

Options :

1. ✖ A
2. ✖ B
3. ✔ C
4. ✖ D

Question Number : 43 Question Type : NAT

www.admission.aglasem.com

A cantilever beam with square cross-section of 6 mm side is subjected to a load of 2 kN normal to the top surface as shown in the figure. The Young's modulus of elasticity of the material of the beam is 210 GPa. The magnitude of slope (in radian) at Q (20 mm from the fixed end) is _____

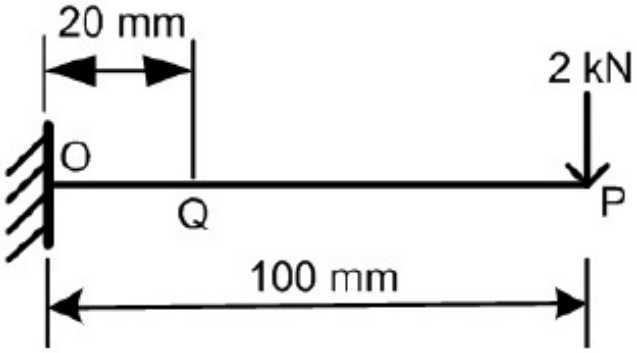

Correct Answer :
0.15 to 0.17

Question Number : 44 Question Type : MCQ

In a plane stress condition, the components of stress at a point are $\sigma_x = 20$ MPa, $\sigma_y = 80$ MPa and $\tau_{xy} = 40$ MPa. The maximum shear stress (in MPa) at the point is

(A) 20 (B) 25 (C) 50 (D) 100

Options :
1. ✖ A
2. ✖ B
3. ✔ C
4. ✖ D

www.admission.aglasem.com

Question Number : 45 Question Type : NAT

In a certain slider-crank mechanism, lengths of crank and connecting rod are equal. If the crank rotates with a uniform angular speed of 14 rad/s and the crank length is 300 mm, the maximum acceleration of the slider (in m/s^2) is _____

Correct Answer :115 to 120

Question Number : 46 Question Type : MCQ

A single-degree-freedom spring-mass system is subjected to a sinusoidal force of 10 N amplitude and frequency ω along the axis of the spring. The stiffness of the spring is 150 N/m, damping factor is 0.2 and the undamped natural frequency is 10ω. At steady state, the amplitude of vibration (in m) is approximately

(A) 0.05 (B) 0.07 (C) 0.70 (D) 0.90

Options :

1. ✖ A
2. ✔ B
3. ✖ C
4. ✖ D

Question Number : 47 Question Type : NAT

A hollow shaft of 1 m length is designed to transmit a power of 30 kW at 700 rpm. The maximum permissible angle of twist in the shaft is 1°. The inner diameter of the shaft is 0.7 times the outer diameter. The modulus of rigidity is 80 GPa. The outside diameter (in mm) of the shaft is_____

Correct Answer :

43 to 45

Question Number : 48 Question Type : MCQ

A hollow shaft ($d_o = 2d_i$ where d_o and d_i are the outer and inner diameters respectively) needs to transmit 20 kW power at 3000 RPM. If the maximum permissible shear stress is 30 MPa, d_o is

(A) 11.29 mm (B) 22.58 mm (C) 33.87 mm (D) 45.16 mm

Options :

1. ✖ A
2. ✔ B
3. ✖ C
4. ✖ D

Question Number : 49 Question Type : MCQ

The total emissive power of a surface is 500 W/m^2 at a temperature T_1 and 1200 W/m^2 at a temperature T_2, where the temperatures are in Kelvin. Assuming the emissivity of the surface to be constant, the ratio of the temperatures $\frac{T_1}{T_2}$ is

(A) 0.308 (B) 0.416 (C) 0.803 (D) 0.874

Options :

1. ✖ A
2. ✖ B
3. ✔ C

www.admission.aglasem.com

4. ✖ D

Question Number : 50 Question Type : MCQ

The head loss for a laminar incompressible flow through a horizontal circular pipe is h_1. Pipe length and fluid remaining the same, if the average flow velocity doubles and the pipe diameter reduces to half its previous value, the head loss is h_2. The ratio h_2/h_1 is

(A) 1 (B) 4 (C) 8 (D) 16

Options :

1. ✖ A
2. ✖ B
3. ✔ C
4. ✖ D

Question Number : 51 Question Type : NAT

For a fully developed laminar flow of water (dynamic viscosity 0.001 Pa-s) through a pipe of radius 5 cm, the axial pressure gradient is −10 Pa/m. The magnitude of axial velocity (in m/s) at a radial location of 0.2 cm is _____

Correct Answer :

6.2 to 6.3

Question Number : 52 Question Type : MCQ

A balanced counterflow heat exchanger has a surface area of 20 m^2 and overall heat transfer coefficient of 20 W/m^2-K. Air (C_p=1000 J/kg-K) entering at 0.4 kg/s and 280 K is to be preheated by the air leaving the system at 0.4 kg/s and 300 K. The outlet temperature (in K) of the preheated air is

(A) 290 (B) 300 (C) 320 (D) 350

Options :

1. ✔ A
2. ✖ B
3. ✖ C
4. ✖ D

Question Number : 53 Question Type : MCQ

A cylindrical uranium fuel rod of radius 5 mm in a nuclear reactor is generating heat at the rate of 4×10^7 W/m^3. The rod is cooled by a liquid (convective heat transfer coefficient 1000 W/m^2-K) at 25 °C. At steady state, the surface temperature (in K) of the rod is

(A) 308 (B) 398 (C) 418 (D) 448

Options :

1. ✖ A

www.admission.aglasem.com

2. ✔ B
3. ✖ C
4. ✖ D

Question Number : 54 Question Type : NAT

Work is done on an adiabatic system due to which its velocity changes from 10 m/s to 20 m/s, elevation increases by 20 m and temperature increases by 1 K. The mass of the system is 10 kg, C_v = 100 J/(kg.K) and gravitational acceleration is 10 m/s^2. If there is no change in any other component of the energy of the system, the magnitude of total work done (in kJ) on the system is _____

Correct Answer :
4.5

Question Number : 55 Question Type : NAT

One kg of air (R = 287 J/kg-K) undergoes an irreversible process between equilibrium state 1 (20 °C, 0.9 m^3) and equilibrium state 2 (20 °C, 0.6 m^3). The change in entropy $s_2 - s_1$ (in J/kg-K) is _____

Correct Answer :
-117 to -115

Question Number : 56 Question Type : MCQ

For the same values of peak pressure, peak temperature and heat rejection, the correct order of efficiencies for Otto, Dual and Diesel cycles is

(A) $\eta_{Otto} > \eta_{Dual} > \eta_{Diesel}$
(B) $\eta_{Diesel} > \eta_{Dual} > \eta_{Otto}$
(C) $\eta_{Dual} > \eta_{Diesel} > \eta_{Otto}$
(D) $\eta_{Diesel} > \eta_{Otto} > \eta_{Dual}$

Options :
1. ✖ A
2. ✔ B
3. ✖ C
4. ✖ D

Question Number : 57 Question Type : NAT

www.admission.aglasem.com

In a Rankine cycle, the enthalpies at turbine entry and outlet are 3159 kJ/kg and 2187 kJ/kg, respectively. If the specific pump work is 2 kJ/kg, the specific steam consumption (in kg/kW-h) of the cycle based on net output is _____

Correct Answer :

3.6 to 3.8

Question Number : 58 Question Type : NAT

A cube and a sphere made of cast iron (each of volume 1000 cm^3) were cast under identical conditions. The time taken for solidifying the cube was 4 s. The solidification time (in s) for the sphere is _____

Correct Answer :

6.0 to 6.3

Question Number : 59 Question Type : MCQ

In a two-stage wire drawing operation, the fractional reduction (ratio of change in cross-sectional area to initial cross-sectional area) in the first stage is 0.4. The fractional reduction in the second stage is 0.3. The overall fractional reduction is

(A) 0.24 (B) 0.58 (C) 0.60 (D) 1.00

Options :

1. ✖ A
2. ✔ B
3. ✖ C
4. ✖ D

www.admission.aglasem.com

Question Number : 60 Question Type : NAT

The flow stress (in MPa) of a material is given by

$$\sigma = 500\,\varepsilon^{0.1},$$

where ε is true strain. The Young's modulus of elasticity of the material is 200 GPa. A block of thickness 100 mm made of this material is compressed to 95 mm thickness and then the load is removed. The final dimension of the block (in mm) is _____

Correct Answer :

95.14 to 95.20

Question Number : 61 Question Type : MCQ

During a TIG welding process, the arc current and arc voltage were 50 A and 60 V, respectively, when the welding speed was 150 mm/min. In another process, the TIG welding is carried out at a welding speed of 120 mm/min at the same arc voltage and heat input to the material so that weld quality remains the same. The welding current (in A) for this process is

(A) 40.00 (B) 44.72 (C) 55.90 (D) 62.25

Options :

1. ✔ A
2. ✖ B
3. ✖ C
4. ✖ D

Question Number : 62 Question Type : NAT

A single point cutting tool with 0° rake angle is used in an orthogonal machining process. At a cutting speed of 180 m/min, the thrust force is 490 N. If the coefficient of friction between the tool and the chip is 0.7, then the power consumption (in kW) for the machining operation is _____

Correct Answer :

2.0 to 2.2

Question Number : 63 Question Type : MCQ

A resistance-capacitance relaxation circuit is used in an electrical discharge machining process. The discharge voltage is 100 V. At a spark cycle time of 25 μs, the average power input required is 1 kW. The capacitance (in μF) in the circuit is

(A) 2.5 (B) 5.0 (C) 7.5 (D) 10.0

Options :

1. ✖ A
2. ✔ B
3. ✖ C
4. ✖ D

Question Number : 64 Question Type : NAT

www.admission.aglasem.com

A project consists of 7 activities. The network along with the time durations (in days) for various activities is shown in the figure.

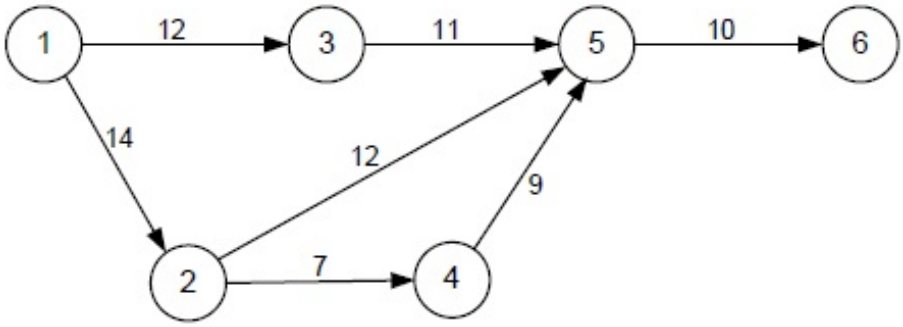

The minimum time (in days) for completion of the project is_____

Correct Answer :

39 to 40

Question Number : 65 Question Type : NAT

A manufacturer has the following data regarding a product:
Fixed cost per month = Rs. 50000
Variable cost per unit = Rs. 200
Selling price per unit = Rs. 300
Production capacity = 1500 units per month
If the production is carried out at 80% of the rated capacity, then the monthly profit (in Rs.) is _____

Correct Answer :

68000 to 72000

www.admission.aglasem.com