Graduate Aptitude Test in Engineering

Notations :

1.Options shown in green color and with ✔ icon are correct.

2.Options shown in red color and with ✖ icon are incorrect.

Question Paper Name:	CE: CIVIL ENGINEERING 8th Feb Shift1
Number of Questions:	65
Total Marks:	100.0

Wrong answer for MCQ will result in negative marks, (-1/3) for 1 mark Questions and (-2/3) for 2 marks Questions.

General Aptitude

Number of Questions:	10
Section Marks:	15.0

Q.1 to Q.5 carry 1 mark each & Q.6 to Q.10 carry 2 marks each.

Question Number : 1 Question Type : MCQ

Extreme focus on syllabus and studying for tests has become such a dominant concern of Indian students that they close their minds to anything _____ to the requirements of the exam.

(A) related (B) extraneous (C) outside (D) useful

Options :

1. ✖ A
2. ✔ B
3. ✖ C
4. ✖ D

Question Number : 2 Question Type : MCQ

Select the pair that best expresses a relationship similar to that expressed in the pair:

Children : Pediatrician

(A) Adult : Orthopaedist (B) Females : Gynaecologist
(C) Kidney : Nephrologist (D) Skin : Dermatologist

Options :

1. ✖ A
2. ✔ B
3. ✖ C
4. ✖ D

Question Number : 3 Question Type : MCQ

www.admission.aglasem.com

The Tamil version of _____ John Abraham-starrer *Madras Cafe* _____cleared by the Censor Board with no cuts last week, but the film's distributors _____ no takers among the exhibitors for a release in Tamil Nadu _____ this Friday.

(A) Mr., was, found, on
(B) a, was, found, at
(C) the, was, found, on
(D) a, being, find at

Options :

1. ✖ A
2. ✖ B
3. ✔ C
4. ✖ D

Question Number : 4 Question Type : MCQ

If ROAD is written as URDG, then SWAN should be written as:

(A) VXDQ
(B) VZDQ
(C) VZDP
(D) UXDQ

Options :

1. ✖ A
2. ✔ B
3. ✖ C
4. ✖ D

Question Number : 5 Question Type : MCQ

A function f(x) is linear and has a value of 29 at $x = -2$ and 39 at $x = 3$. Find its value at $x = 5$.

(A) 59
(B) 45
(C) 43
(D) 35

Options :

1. ✖ A
2. ✖ B
3. ✔ C
4. ✖ D

www.admission.aglasem.com

Question Number : 6 Question Type : MCQ

Alexander turned his attention towards India, since he had conquered Persia.

Which one of the statements below is logically valid and can be inferred from the above sentence?

(A) Alexander would not have turned his attention towards India had he not conquered Persia.

(B) Alexander was not ready to rest on his laurels, and wanted to march to India.

(C) Alexander was completely in control of his army and could command it to move towards India.

(D) Since Alexander's kingdom extended to Indian borders after the conquest of Persia, he was keen to move further.

Options :

1. ✔ A
2. ✖ B
3. ✖ C
4. ✖ D

Question Number : 7 Question Type : MCQ

Most experts feel that in spite of possessing all the technical skills required to be a batsman of the highest order, he is unlikely to be so due to lack of requisite temperament. He was guilty of throwing away his wicket several times after working hard to lay a strong foundation. His critics pointed out that until he addressed this problem, success at the highest level will continue to elude him.

Which of the statement(s) below is/are logically valid and can be inferred from the above passage?

(i) He was already a successful batsman at the highest level.
(ii) He has to improve his temperament in order to become a great batsman.
(iii) He failed to make many of his good starts count.
(iv) Improving his technical skills will guarantee success.

(A) (iii) and (iv)
(B) (ii) and (iii)
(C) (i), (ii) and (iii)
(D) (ii) only

Options :

1. ✖ A
2. ✔ B
3. ✖ C
4. ✖ D

Question Number : 8 Question Type : NAT

The exports and imports (in crores of Rs.) of a country from the year 2000 to 2007 are given in the following bar chart. In which year is the combined percentage increase in imports and exports the highest?

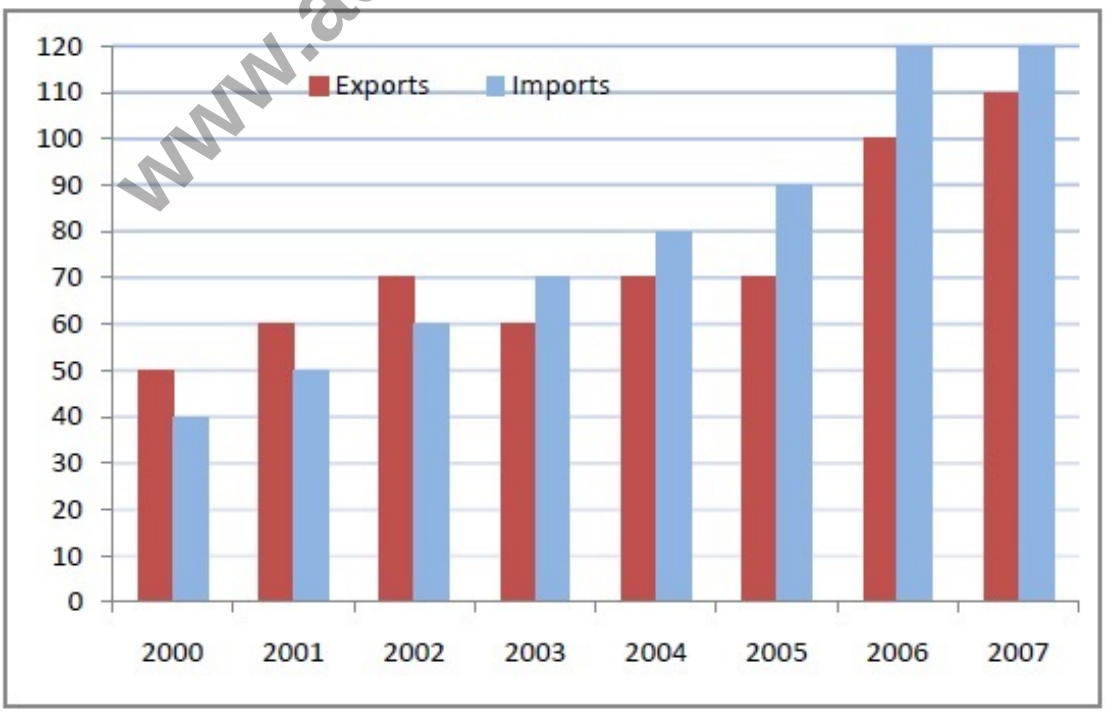

www.admission.aglasem.com

Correct Answer :
2006

Question Number : 9 Question Type : MCQ

Choose the most appropriate equation for the function drawn as a thick line, in the plot below.

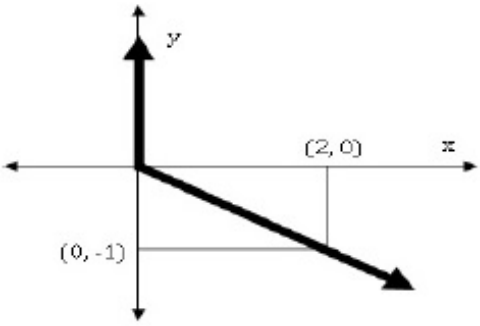

(A) $x = y - |y|$ (B) $x = -(y - |y|)$ (C) $x = y + |y|$ (D) $x = -(y + |y|)$

Options :
1. ✖ A
2. ✔ B
3. ✖ C
4. ✖ D

Question Number : 10 Question Type : MCQ

The head of a newly formed government desires to appoint five of the six selected members P, Q, R, S, T, and U to portfolios of Home, Power, Defense, Telecom, and Finance. U does not want any portfolio if S gets one of the five. R wants either Home or Finance or no portfolio. Q says that if S gets either Power or Telecom, then she must get the other one. T insists on a portfolio if P gets one.

Which is the valid distribution of portfolios?

(A) P-Home, Q-Power, R-Defense, S-Telecom, T-Finance
(B) R-Home, S-Power, P-Defense, Q-Telecom, T-Finance
(C) P-Home, Q-Power, T-Defense, S-Telecom, U-Finance
(D) Q-Home, U-Power, T-Defense, R-Telecom, P-Finance

Options :
1. ✖ A
2. ✔ B
3. ✖ C
4. ✖ D

www.admission.aglasem.com

Civil Engineering

Number of Questions:	55
Section Marks:	85.0

Q.11 to Q.35 carry 1 mark each & Q.36 to Q.65 carry 2 marks each.

Question Number : 11 Question Type : NAT

For what value of p the following set of equations will have no solution?

$$2x + 3y = 5$$
$$3x + py = 10$$

Correct Answer :
4.49 to 4.51

Question Number : 12 Question Type : MCQ

The integral $\int_{x_1}^{x_2} x^2 dx$ with $x_2 > x_1 > 0$ is evaluated analytically as well as numerically using a single application of the trapezoidal rule. If I is the exact value of the integral obtained analytically and J is the approximate value obtained using the trapezoidal rule, which of the following statements is correct about their relationship?

(A) $J > I$
(B) $J < I$
(C) $J = I$
(D) Insufficient data to determine the relationship

Options :
1. ✔ A
2. ✖ B
3. ✖ C
4. ✖ D

Question Number : 13 Question Type : NAT

Consider the following probability mass function (p.m.f.) of a random variable X:

$$p(x, q) = \begin{cases} q & \text{if } X = 0 \\ 1 - q & \text{if } X = 1 \\ 0 & \text{otherwise} \end{cases}$$

If $q = 0.4$, the variance of X is _____.

Correct Answer:
0.23 to 0.25

Question Number : 14 Question Type : MCQ

www.admission.aglasem.com

Workability of concrete can be measured using slump, compaction factor and Vebe time. Consider the following statements for workability of concrete:

(i) As the slump increases, the Vebe time increases
(ii) As the slump increases, the compaction factor increases

Which of the following is TRUE?

(A) Both (i) and (ii) are True
(B) Both (i) and (ii) are False
(C) (i) is True and (ii) is False
(D) (i) is False and (ii) is True

Options :

1. ✖ A
2. ✖ B
3. ✖ C
4. ✔ D

Question Number : 15 Question Type : MCQ

Consider the following statements for air-entrained concrete:

(i) Air-entrainment reduces the water demand for a given level of workability
(ii) Use of air-entrained concrete is required in environments where cyclic freezing and thawing is expected

Which of the following is TRUE?

(A) Both (i) and (ii) are True
(B) Both (i) and (ii) are False
(C) (i) is True and (ii) is False
(D) (i) is False and (ii) is True

Options :

1. ✔ A
2. ✖ B
3. ✖ C
4. ✖ D

Question Number : 16 Question Type : MCQ

www.admission.aglasem.com

Consider the singly reinforced beam shown in the figure below:

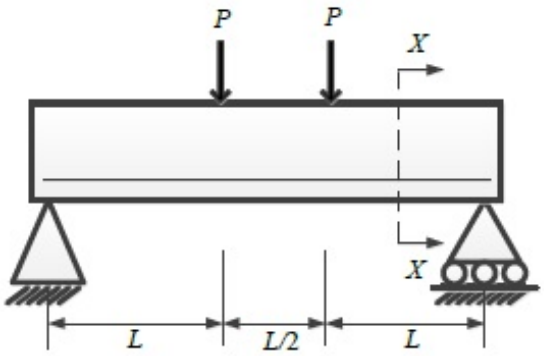

At cross-section *XX*, which of the following statements is TRUE at the limit state?

(A) The variation of stress is linear and that of strain is non-linear
(B) The variation of strain is linear and that of stress is non-linear
(C) The variation of both stress and strain is linear
(D) The variation of both stress and strain is non-linear

Options :

1. ✖ A
2. ✔ B
3. ✖ C
4. ✖ D

Question Number : 17 Question Type : MCQ

For the beam shown below, the stiffness coefficient K_{22} can be written as

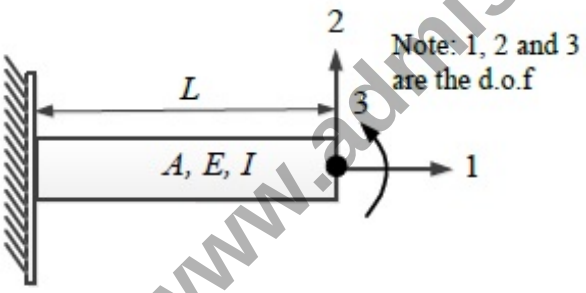

(A) $\frac{6EI}{L^2}$ (B) $\frac{12EI}{L^3}$ (C) $\frac{3EI}{L}$ (D) $\frac{EI}{6L^2}$

Options :

1. ✖ A
2. ✔ B
3. ✖ C
4. ✖ D

Question Number : 18 Question Type : NAT

The development length of a deformed reinforcement bar can be expressed as $(1/k)\ (\phi\sigma_s/\tau_{bd})$. From the IS:456-2000, the value of k can be calculated as _____.

www.admission.aglasem.com

Correct Answer :
6.38 to 6.42

Question Number : 19 Question Type : NAT

For the beam shown below, the value of the support moment M is _____ kN-m.

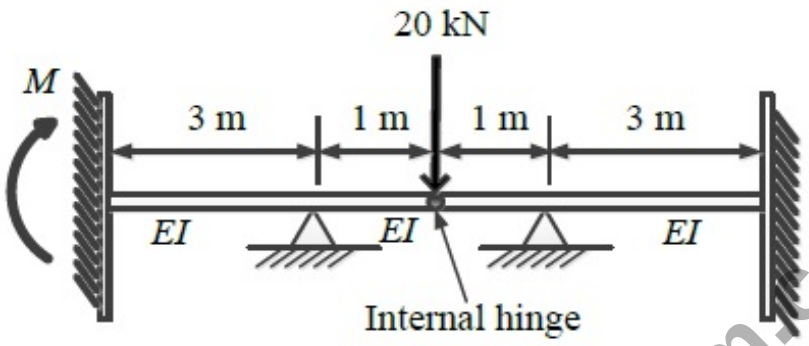

Correct Answer:
5

Question Number : 20 Question Type : NAT

Two triangular wedges are glued together as shown in the following figure. The stress acting normal to the interface, σ_n is _____ MPa.

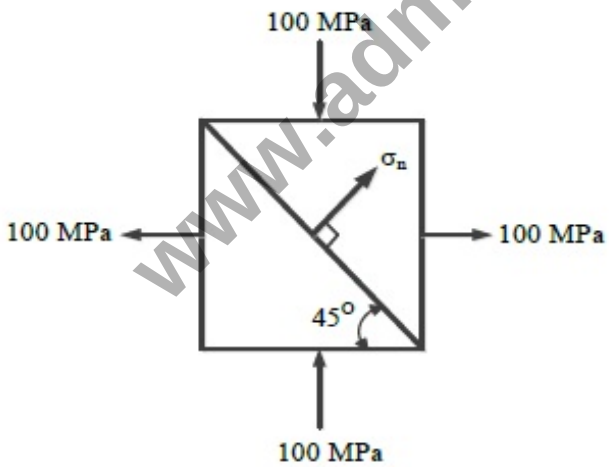

Correct Answer :
0

Question Number : 21 Question Type : MCQ

www.admission.aglasem.com

A fine-grained soil has 60% (by weight) silt content. The soil behaves as *semi-solid* when water content is between 15% and 28%. The soil behaves *fluid-like* when the water content is more than 40%. The '*Activity*' of the soil is

(A) 3.33 (B) 0.42 (C) 0.30 (D) 0.20

Options :

1. ✖ A
2. ✖ B
3. ✔ C
4. ✖ D

Question Number : 22 Question Type : MCQ

Which of the following statements is TRUE for the relation between discharge velocity and seepage velocity?

(A) Seepage velocity is always smaller than discharge velocity
(B) Seepage velocity can never be smaller than discharge velocity
(C) Seepage velocity is equal to the discharge velocity
(D) No relation between seepage velocity and discharge velocity can be established

Options :

1. ✖ A
2. ✔ B
3. ✖ C
4. ✖ D

Question Number : 23 Question Type : MCQ

Which of the following statements is TRUE for degree of disturbance of collected soil sample?

(A) Thinner the sampler wall, lower the degree of disturbance of collected soil sample
(B) Thicker the sampler wall, lower the degree of disturbance of collected soil sample
(C) Thickness of the sampler wall and the degree of disturbance of collected soil sample are unrelated
(D) The degree of disturbance of collected soil sample is proportional to the inner diameter of the sampling tube

Options :

1. ✔ A
2. ✖ B
3. ✖ C
4. ✖ D

Question Number : 24 Question Type : MCQ

In an unconsolidated undrained triaxial test, it is observed that an increase in cell pressure from 150 kPa to 250 kPa leads to a pore pressure increase of 80 kPa. It is further observed that, an increase of 50 kPa in deviatoric stress results in an increase of 25 kPa in the pore pressure. The value of *Skempton's pore pressure parameter B* is:

(A) 0.5 (B) 0.625 (C) 0.8 (D) 1.0

www.admission.aglasem.com

Options :

1. ✖ A
2. ✖ B
3. ✔ C
4. ✖ D

Question Number : 25 Question Type : MCQ

Which of the following statements is NOT correct?

(A) Loose sand exhibits contractive behavior upon shearing
(B) Dense sand when sheared under undrained condition, may lead to generation of negative pore pressure
(C) Black cotton soil exhibits expansive behavior
(D) Liquefaction is the phenomenon where cohesionless soil near the downstream side of dams or sheet-piles loses its shear strength due to high upward hydraulic gradient

Options :

1. ✖ A
2. ✖ B
3. ✖ C
4. ✔ D

Question Number : 26 Question Type : MCQ

In a two-dimensional steady flow field, in a certain region of the x-y plane, the velocity component in the x-direction is given by $v_x = x^2$ and the density varies as $\rho = \frac{1}{x}$. Which of the following is a valid expression for the velocity component in the y-direction, v_y?

(A) $v_y = -x/y$ (B) $v_y = x/y$ (C) $v_y = -xy$ (D) $v_y = xy$

Options :

1. ✖ A
2. ✖ B
3. ✔ C
4. ✖ D

Question Number : 27 Question Type : MCQ

For steady incompressible flow through a closed-conduit of uniform cross-section, the direction of flow will always be:

(A) from higher to lower elevation
(B) from higher to lower pressure
(C) from higher to lower velocity
(D) from higher to lower piezometric head

Options :

1. ✖ A
2. ✖ B
3. ✖ C
4. ✔ D

Question Number : 28 Question Type : MCQ

www.admission.aglasem.com

A circular pipe has a diameter of 1 m, bed slope of 1 in 1000, and Manning's roughness coefficient equal to 0.01. It may be treated as an open channel flow when it is flowing just full, *i.e.*, the water level just touches the crest. The discharge in this condition is denoted by Q_{full}. Similarly, the discharge when the pipe is flowing half-full, *i.e.*, with a flow depth of 0.5 m, is denoted by Q_{half}. The ratio Q_{full} / Q_{half} is:

(A) 1 (B) $\sqrt{2}$ (C) 2 (D) 4

Options :

1. ✖ A
2. ✖ B
3. ✔ C
4. ✖ D

Question Number : 29 Question Type : MCQ

The two columns below show some parameters and their possible values.

Parameter	Value
P – Gross Command Area	I – 100 hectares/cumec
Q – Permanent Wilting Point	II – 6 °C
R – Duty of canal water	III – 1000 hectares
S – Delta of wheat	IV – 1000 cm
	V – 40 cm
	VI – 0.12

Which of the following options matches the parameters and the values correctly?

(A) P-I, Q-II, R-III, S-IV
(B) P-III, Q-VI, R-I, S-V
(C) P-I, Q-V, R-VI, S-II
(D) P-III, Q-II, R-V, S-IV

Options :

1. ✖ A
2. ✔ B
3. ✖ C
4. ✖ D

Question Number : 30 Question Type : MCQ

Total Kjeldahl Nitrogen (TKN) concentration (mg/L as N) in domestic sewage is the sum of the concentrations of:

(A) organic and inorganic nitrogen in sewage
(B) organic nitrogen and nitrate in sewage
(C) organic nitrogen and ammonia in sewage
(D) ammonia and nitrate in sewage

Options :

1. ✖ A
2. ✖ B
3. ✔ C
4. ✖ D

www.admission.aglasem.com

Question Number : 31 Question Type : MCQ

Solid waste generated from an industry contains only two components, X and Y as shown in the table below

Component	Composition (% weight)	Density (kg/m^3)
X	c_1	ρ_1
Y	c_2	ρ_2

Assuming $(c_1 + c_2) = 100$, the composite density of the solid waste (ρ) is given by:

(A) $\dfrac{100}{\left(\dfrac{c_1}{\rho_1} + \dfrac{c_2}{\rho_2}\right)}$

(B) $100\left(\dfrac{\rho_1}{c_1} + \dfrac{\rho_2}{c_2}\right)$

(C) $100(c_1\rho_1 + c_2\rho_2)$

(D) $100\left(\dfrac{\rho_1\rho_2}{c_1\rho_1 + c_2\rho_2}\right)$

Options :

1. ✔ A
2. ✖ B
3. ✖ C
4. ✖ D

Question Number : 32 Question Type : NAT

The penetration value of a bitumen sample tested at 25°C is 80. When this sample is heated to 60°C and tested again, the needle of the penetration test apparatus penetrates the bitumen sample by *d* mm. The value of *d* CANNOT be less than _____ mm.

Correct Answer :

8

Question Number : 33 Question Type : MCQ

Which of the following statements CANNOT be used to describe free flow speed (u_f) of a traffic stream?

(A) u_f is the speed when flow is negligible
(B) u_f is the speed when density is negligible
(C) u_f is affected by geometry and surface conditions of the road
(D) u_f is the speed at which flow is maximum and density is optimum

Options :

1. ✖ A
2. ✖ B
3. ✖ C
4. ✔ D

Question Number : 34 Question Type : MCQ

www.admission.aglasem.com

Which of the following statements is FALSE?

(A) Plumb line is along the direction of gravity
(B) Mean Sea Level (MSL) is used as a reference surface for establishing the horizontal control
(C) Mean Sea Level (MSL) is a simplification of the Geoid
(D) Geoid is an equi-potential surface of gravity

Options :

1. ✖ A
2. ✔ B
3. ✖ C
4. ✖ D

Question Number : 35 Question Type : MCQ

In a closed loop traverse of 1 km total length, the closing errors in departure and latitude are 0.3 m and 0.4 m, respectively. The relative precision of this traverse will be:

(A) 1: 5000 (B) 1: 4000 (C) 1: 3000 (D) 1: 2000

Options :

1. ✖ A
2. ✖ B
3. ✖ C
4. ✔ D

Question Number : 36 Question Type : MCQ

The smallest and largest Eigen values of the following matrix are:

$$\begin{bmatrix} 3 & -2 & 2 \\ 4 & -4 & 6 \\ 2 & -3 & 5 \end{bmatrix}$$

(A) 1.5 and 2.5 (B) 0.5 and 2.5 (C) 1.0 and 3.0 (D) 1.0 and 2.0

Options :

1. ✖ A
2. ✖ B
3. ✖ C
4. ✔ D

Question Number : 37 Question Type : NAT

The quadratic equation $x^2 - 4x + 4 = 0$ is to be solved numerically, starting with the initial guess $x_0 = 3$. The Newton-Raphson method is applied once to get a new estimate and then the Secant method is applied once using the initial guess and this new estimate. The estimated value of the root after the application of the Secant method is _____.

www.admission.aglasem.com

Correct Answer :
2.32 to 2.34

Question Number : 38 Question Type : MCQ

Consider the following differential equation:

$$x(ydx + xdy)\cos\frac{y}{x} = y(xdy - ydx)\sin\frac{y}{x}$$

Which of the following is the solution of the above equation (c is an arbitrary constant)?

(A) $\frac{x}{y}\cos\frac{y}{x} = c$ (B) $\frac{x}{y}\sin\frac{y}{x} = c$ (C) $xy\cos\frac{y}{x} = c$ (D) $xy\sin\frac{y}{x} = c$

Options :
1. ✖ A
2. ✖ B
3. ✔ C
4. ✖ D

Question Number : 39 Question Type : MCQ

Consider the following complex function:

$$f(z) = \frac{9}{(z-1)(z+2)^2}$$

Which of the following is one of the residues of the above function?

(A) -1 (B) 9/16 (C) 2 (D) 9

Options :
1. ✔ A
2. ✖ B
3. ✖ C
4. ✖ D

Question Number : 40 Question Type : NAT

The directional derivative of the field $u(x, y, z) = x^2 - 3yz$ in the direction of the vector $(\hat{i} + \hat{j} - 2\hat{k})$ at point $(2, -1, 4)$ is _____.

Correct Answer:
-5.72 to -5.70

Question Number : 41 Question Type : NAT

www.admission.aglasem.com

The composition of an air-entrained concrete is given below:

Water	:	184 kg/m^3
Ordinary Portland Cement (OPC)	:	368 kg/m^3
Sand	:	606 kg/m^3
Coarse aggregate	:	1155 kg/m^3

Assume the specific gravity of OPC, sand and coarse aggregate to be 3.14, 2.67 and 2.74, respectively. The air content is _____ liters/ m^3.

Correct Answer :

49.5 to 51.0

Question Number : 42 Question Type : NAT

A bracket plate connected to a column flange transmits a load of 100 kN as shown in the following figure. The maximum force for which the bolts should be designed is _____ kN.

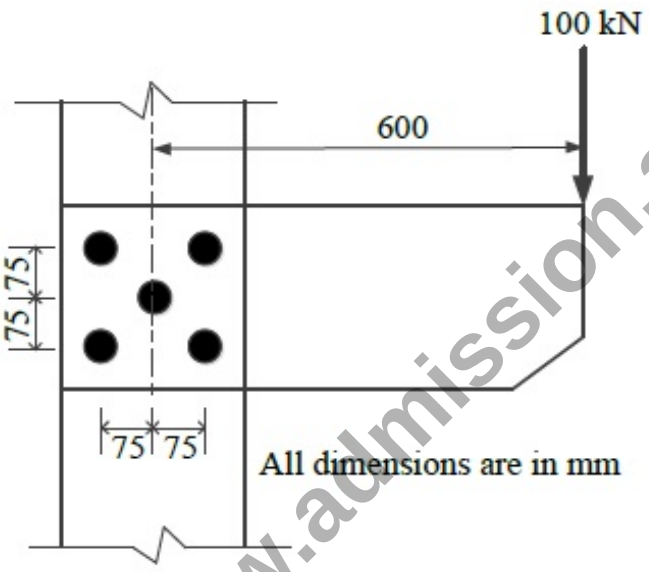

www.admission.aglasem.com

Correct Answer :

155 to 156.3

Question Number : 43 Question Type : NAT

Consider the singly reinforced beam section given below (left figure). The stress block parameters for the cross-section from IS:456-2000 are also given below (right figure). The moment of resistance for the given section by the limit state method is _____ kN-m.

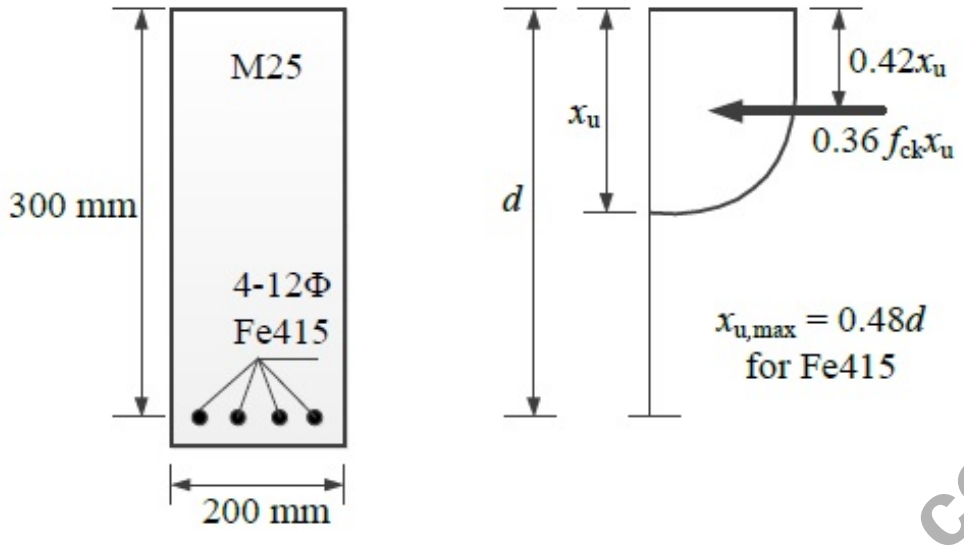

Correct Answer :

42 to 43

Question Number : 44 Question Type : NAT

For formation of *collapse mechanism* in the following figure, the minimum value of P_u is cM_p/L. M_p and $3M_p$ denote the plastic moment capacities of beam sections as shown in this figure. The value of c is _____.

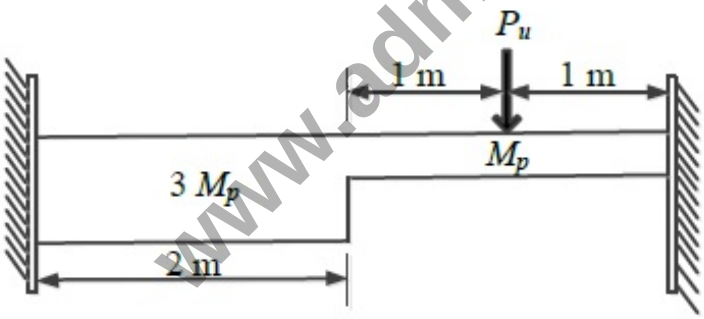

Correct Answer :

3.30 to 3.40

Question Number : 45 Question Type : NAT

www.admission.aglasem.com

A tapered circular rod of diameter varying from 20 mm to 10 mm is connected to another uniform circular rod of diameter 10 mm as shown in the following figure. Both bars are made of same material with the modulus of elasticity, $E = 2\text{x}10^5$ MPa. When subjected to a load $P = 30\pi$ kN, the deflection at point A is _____ mm.

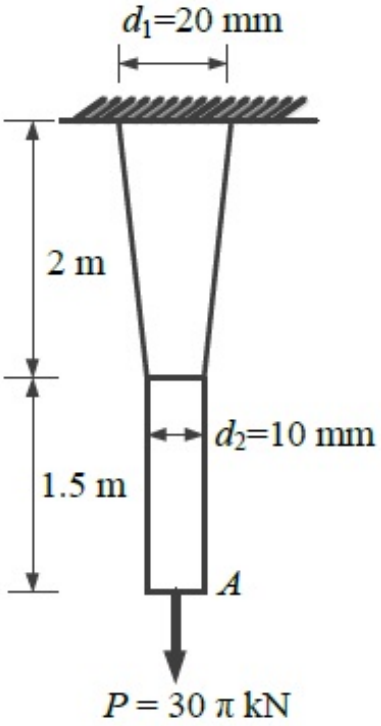

Correct Answer :
14.5 to 15.5

Question Number : 46 Question Type : NAT

Two beams are connected by a linear spring as shown in the following figure. For a load P as shown in the figure, the percentage of the applied load P carried by the spring is _____.

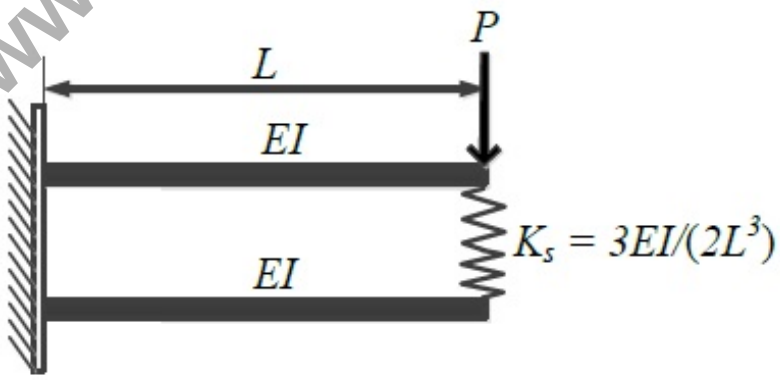

Correct Answer :
25

Question Number : 47 Question Type : NAT

www.admission.aglasem.com

For the 2D truss with the applied loads shown below, the strain energy in the member XY is _____ kN-m. For member XY, assume $AE = 30$ kN, where A is cross-section area and E is the modulus of elasticity.

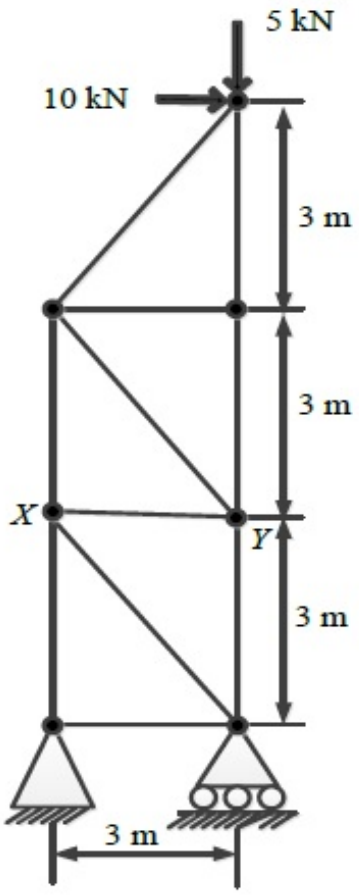

Correct Answer :

5

Question Number : 48 Question Type : MCQ

www.admission.aglasem.com

An earth embankment is to be constructed with compacted cohesionless soil. The volume of the embankment is 5000 m^3 and the target dry unit weight is 16.2 kN/m^3. Three nearby sites (see figure below) have been identified from where the required soil can be transported to the construction site. The void ratios (e) of different sites are shown in the figure. Assume the specific gravity of soil to be 2.7 for all three sites. If the cost of transportation per km is twice the cost of excavation per m^3 of borrow pits, which site would you choose as the most economic solution? (Use unit weight of water = 10 kN/m^3)

(A) Site X (B) Site Y (C) Site Z (D) Any of the sites

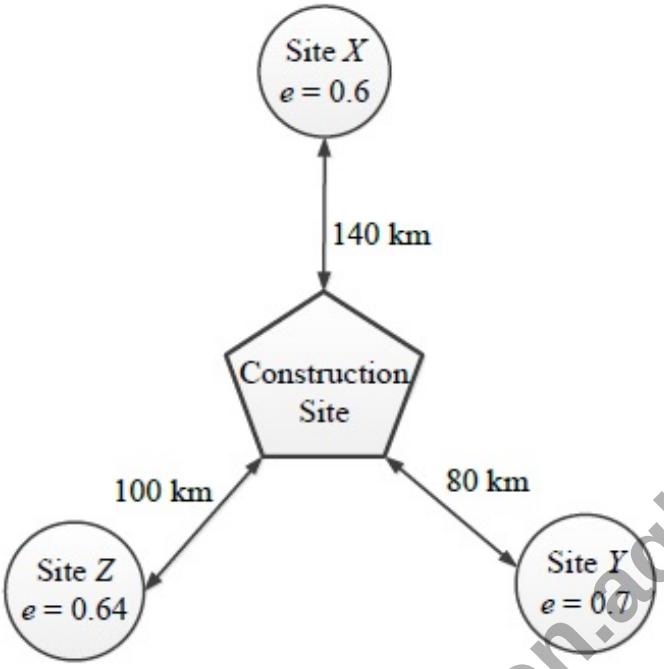

Options :

1. ✔ A
2. ✖ B
3. ✖ C
4. ✖ D

Question Number : 49 Question Type : NAT

www.admission.aglasem.com

A water tank is to be constructed on the soil deposit shown in the figure below. A circular footing of diameter 3 m and depth of embedment 1 m has been designed to support the tank. The total vertical load to be taken by the footing is 1500 kN. Assume the unit weight of water as 10 kN/m^3 and the load dispersion pattern as 2V:1H. The expected settlement of the tank due to primary consolidation of the clay layer is _____ mm.

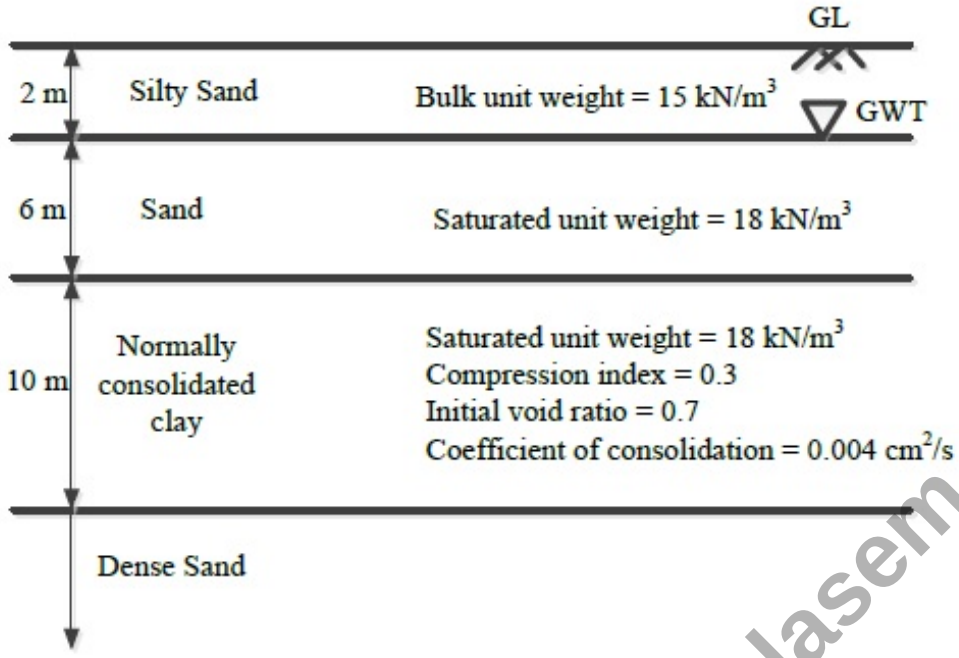

Correct Answer :

50 to 55

Question Number : 50 Question Type : NAT

A 20 m thick clay layer is sandwiched between a silty sand layer and a gravelly sand layer. The layer experiences 30 mm settlement in 2 years.

Given:

$$T_v = \begin{cases} \frac{\pi}{4}\left(\frac{U}{100}\right)^2 & \text{for } U \le 60\% \\ 1.781 - 0.933\log_{10}(100 - U) & \text{for } U > 60\% \end{cases}$$

where T_v is the time factor and U is the degree of consolidation in %.

If the coefficient of consolidation of the layer is 0.003 cm^2/s, the deposit will experience a total of 50 mm settlement in the next _____ years.

Correct Answer:

4.0 to 5.0

Question Number : 51 Question Type : NAT

www.admission.aglasem.com

A non-homogeneous soil deposit consists of a silt layer sandwiched between a fine-sand layer at top and a clay layer below. Permeability of the silt layer is 10 times the permeability of the clay layer and one-tenth of the permeability of the sand layer. Thickness of the silt layer is 2 times the thickness of the sand layer and two-third of the thickness of the clay layer. The ratio of equivalent horizontal and equivalent vertical permeability of the deposit is _____.

Correct Answer :

10.0 to 12.0

Question Number : 52 Question Type : NAT

A square footing (2 m x 2 m) is subjected to an inclined point load, P as shown in the figure below. The water table is located well below the base of the footing. Considering one-way eccentricity, the *net safe* load carrying capacity of the footing for a factor of safety of 3.0 is _____ kN.

The following factors may be used:

Bearing capacity factors: $N_q = 33.3$, $N_\gamma = 37.16$; Shape factors: $F_{qs} = F_{\gamma s} = 1.314$; Depth factors: $F_{qd} = F_{\gamma d} = 1.113$; Inclination factors: $F_{qi} = 0.444$, $F_{\gamma i} = 0.02$

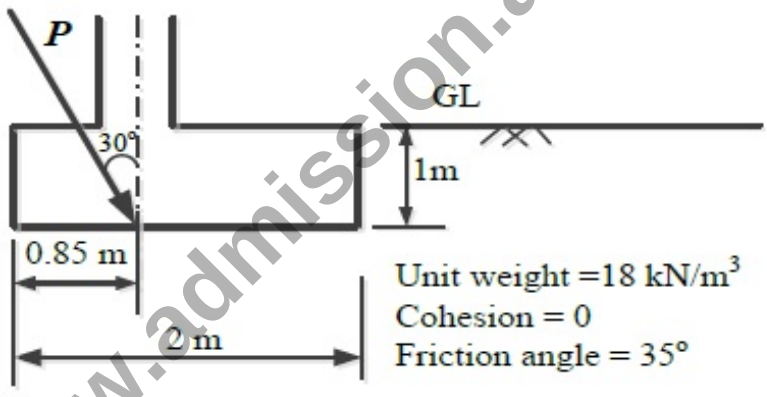

Correct Answer :

434 to 444

Question Number : 53 Question Type : NAT

Two reservoirs are connected through a 930 m long, 0.3 m diameter pipe, which has a gate valve. The pipe entrance is sharp (loss coefficient = 0.5) and the valve is half-open (loss coefficient = 5.5). The head difference between the two reservoirs is 20 m. Assume the friction factor for the pipe as 0.03 and g =10 m/s^2. The discharge in the pipe accounting for all minor and major losses is _____ m^3/s.

www.admission.aglasem.com

Correct Answer:
0.140 to 0.142

Question Number : 54 Question Type :NAT

A hydraulic jump is formed in a 2 m wide rectangular channel which is horizontal and frictionless. The post-jump depth and velocity are 0.8 m and 1 m/s, respectively. The pre-jump velocity is _____ m/s. (use $g = 10$ m/s^2)

Correct Answer :
4.75 to 4.85

Question Number : 55 Question Type : NAT

A short reach of a 2 m wide rectangular open channel has its bed level rising in the direction of flow at a slope of 1 in 10000. It carries a discharge of 4 m^3/s and its Manning's roughness coefficient is 0.01. The flow in this reach is gradually varying. At a certain section in this reach, the depth of flow was measured as 0.5 m. The rate of change of the water depth with distance, dy/dx, at this section is _____ (use $g = 10$ m/s^2).

Correct Answer :
0.0031 to 0.0033

Question Number : 56 Question Type : MCQ

The drag force, F_D, on a sphere kept in a uniform flow field depends on the diameter of the sphere, D; flow velocity, V; fluid density, ρ; and dynamic viscosity, μ. Which of the following options represents the non-dimensional parameters which could be used to analyze this problem?

(A) $\frac{F_D}{VD}$ and $\frac{\mu}{\rho VD}$

(B) $\frac{F_D}{\rho V D^2}$ and $\frac{\rho VD}{\mu}$

(C) $\frac{F_D}{\rho V^2 D^2}$ and $\frac{\rho VD}{\mu}$

(D) $\frac{F_D}{\rho V^3 D^3}$ and $\frac{\mu}{\rho VD}$

Options :
1. ✖ A
2. ✖ B
3. ✔ C
4. ✖ D

Question Number : 57 Question Type : NAT

www.admission.aglasem.com

In a catchment, there are four rain-gauge stations, *P*, *Q*, *R*, and *S*. Normal annual precipitation values at these stations are 780 mm, 850 mm, 920 mm, and 980 mm, respectively. In the year 2013, stations *Q*, *R*, and *S*, were operative but *P* was not. Using the normal ratio method, the precipitation at station *P* for the year 2013 has been estimated as 860 mm. If the observed precipitation at stations *Q* and *R* for the year 2013 were 930 mm and 1010 mm, respectively; what was the observed precipitation (in mm) at station *S* for that year?

Correct Answer:
1093 to 1094

Question Number : 58 Question Type : NAT

The 4-hr unit hydrograph for a catchment is given in the table below. What would be the maximum ordinate of the S-curve (in m^3/s) derived from this hydrograph?

Time (hr)	0	2	4	6	8	10	12	14	16	18	20	22	24
Unit hydrograph ordinate (m^3/s)	0	0.6	3.1	10	13	9	5	2	0.7	0.3	0.2	0.1	0

Correct Answer :
21.9 to 22.1

Question Number : 59 Question Type : NAT

The concentration of Sulfur Dioxide (SO_2) in ambient atmosphere was measured as 30 $\mu g/m^3$. Under the same conditions, the above SO_2 concentration expressed in ppm is _____.

Given: $P/(RT) = 41.6$ mol/m^3; where, P = Pressure; T = Temperature; R = universal gas constant; Molecular weight of SO_2 = 64.

Correct Answer :
0.010 to 0.012

Question Number : 60 Question Type : NAT

Consider a primary sedimentation tank (PST) in a water treatment plant with Surface Overflow Rate (SOR) of 40 $m^3/m^2/d$. The diameter of the spherical particle which will have 90 percent theoretical removal efficiency in this tank is _____ μm. Assume that settling velocity of the particles in water is described by Stokes's Law.

Given: Density of water = 1000 kg/m^3; Density of particle = 2650 kg/m^3; $g = 9.81$ m/s^2; Kinematic viscosity of water (ν) = 1.10×10^{-6} m^2/s

www.admission.aglasem.com

Correct Answer :
20.0 to 24.0

Question Number : 61 Question Type : NAT

The acceleration-time relationship for a vehicle subjected to non-uniform acceleration is,

$$\frac{dv}{dt} = (\alpha - \beta v_0)e^{-\beta t}$$

where, v is the speed in m/s, t is the time in s, α and β are parameters, and v_0 is the initial speed in m/s. If the accelerating behavior of a vehicle, whose driver intends to overtake a slow moving vehicle ahead, is described as,

$$\frac{dv}{dt} = (\alpha - \beta v)$$

Considering $\alpha = 2$ m/s^2, $\beta = 0.05$ s^{-1} and $\frac{dv}{dt} = 1.3$ m/s^2 at $t = 3$ s, the distance (in m) travelled by the vehicle in 35 s is _____.

Correct Answer :
895 to 905

Question Number : 62 Question Type : MCQ

On a circular curve, the rate of superelevation is e. While negotiating the curve a vehicle comes to a stop. It is seen that the stopped vehicle does not slide inwards (in the radial direction). The coefficient of side friction is f. Which of the following is true:

(A) $e \leq f$ (B) $f < e < 2f$ (C) $e \geq 2f$ (D) none of the above

Options :
1. ✔ A
2. ✖ B
3. ✖ C
4. ✖ D

Question Number : 63 Question Type : NAT

www.admission.aglasem.com

A sign is required to be put up asking drivers to slow down to 30 km/h before entering Zone Y (see figure). On this road, vehicles require 174 m to slow down to 30 km/h (the distance of 174 m includes the distance travelled during the perception-reaction time of drivers). The sign can be read by 6/6 vision drivers from a distance of 48 m. The sign is placed at a distance of x m from the start of Zone Y so that even a 6/9 vision driver can slow down to 30 km/h before entering the zone. The minimum value of x is _____ m.

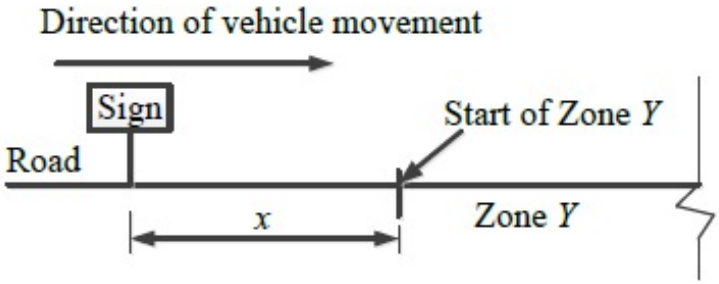

Correct Answer :

141.84 to 142.32

Question Number : 64 Question Type : MCQ

In a survey work, three independent angles X, Y and Z were observed with weights W_X, W_Y, W_Z, respectively. The weight of the sum of angles X, Y and Z is given by:

(A) $1/\left(\frac{1}{W_X}+\frac{1}{W_Y}+\frac{1}{W_Z}\right)$

(B) $\left(\frac{1}{W_X}+\frac{1}{W_Y}+\frac{1}{W_Z}\right)$

(C) $W_X+W_Y+W_Z$

(D) $W_X^2+W_Y^2+W_Z^2$

Options :

1. ✔ A
2. ✖ B
3. ✖ C
4. ✖ D

Question Number : 65 Question Type : MCQ

In a region with magnetic declination of 2°E, the magnetic Fore bearing (FB) of a line AB was measured as N79°50' E. There was local attraction at A. To determine the correct magnetic bearing of the line, a point O was selected at which there was no local attraction. The magnetic FB of line AO and OA were observed to be S52°40'E and N50°20'W, respectively. What is the true FB of line AB?

(A) N81°50'E (B) N82°10'E (C) N84°10'E (D) N77°50'E

Options :

1. ✖ A
2. ✖ B
3. ✔ C

www.admission.aglasem.com

4. ✖ D

www.admission.aglasem.com