ANNUAL SYLLABUS (2024-25)
CLASS: 12
SUBJECT: ENGLISH CORE (CODE-301)

Section - A Reading Comprehension	22 Marks
Section - B Writing Skills	18 Marks
Section - C Literature	40 Marks
Assessment of Listening and Speaking Skills +Project	20 Marks

TEXTBOOKS	READING SKILLS	CREATIVE WRITING SKILLS
FLAMINGO **Prose:** Lesson-1 The Last Lesson Lesson-2 Lost Spring Lesson-3 Deep Water Lesson-4 The Rattrap Lesson-5 Indigo **Poetry:** Poem - 1 My Mother at Sixty Six Poem - 2 Keeping Quiet Poem - 3 A Thing of Beauty **VISTAS** Lesson -1 The Third Level Lesson -2 The Tiger King Lesson- 3 Journey to the End of the Earth Lesson-4 The Enemy	**Unseen Passage Types**: Factual Passage Descriptive Passage Literary Passage **Unseen Case Based Factual Passage** With verbal/visual inputs like statistical data, charts etc. The combined Word limit for both the passages will be 700-750 Words.	**Short Composition** • Notice Writing • Formal/Informal Invitation and replies Word limit 50 words **Letter Writing** Based on visual and/or verbal input in 120-150 words. Letter types: • Application for a job with Bio Data or Resume. • Letter to Editor (Giving suggestions or opinion on issues of public interest) **Article Writing** Based on verbal inputs in 120-150 words (may be descriptive/analytical in nature) **Report Writing** Based on verbal inputs in 120-150 words (may be descriptive/analytical in nature)

INTERNAL ASSESSMENT

- Assessment of Listening Skills - 05 Marks
- Assessment of Speaking Skills - 05 Marks
- Project Work - 10 Marks

Note:- The above mentioned syllabus should be completed by September 13, 2024

Revision

Mid Term Examination

TEXTBOOKS	READING SKILLS	CREATIVE WRITING SKILLS
FLAMINGO **Prose:** Lesson - 6 Poets and Pancakes Lesson - 7 The Interview Lesson - 8 Going Places **Poetry:** Poem - 4 A Roadside Stand Poem - 5 Aunt Jennifer's Tigers **VISTAS** Lesson -5 On the Face of It Lesson-6 Memories of Childhood • The Cutting of My Long Hair • We too are Human Beings	**Unseen Passage** **Type**: Factual Passage Descriptive Passage Literary Passage **Unseen Case Based Factual Passage** With verbal/visual inputs like statistical data, charts etc. The combined Word limit for both the passages will be 700-750 Words.	**Short Composition** • Notice Writing • Formal/Informal Invitation and replies Word limit 50 words **Letter Writing** Based on visual and/or verbal input in 120-150 words. Letter types: • Application for a job with Bio Data or Resume. • Letter to Editor (Giving suggestions or opinion on issues of public interest) **Article Writing** Based on verbal inputs in 120-150 words (may be descriptive/analytical in nature) **Report Writing** Based on verbal inputs in 120-150 words (may be descriptive/analytical in nature)

INTERNAL ASSESSMENT

- Assessment of Listening Skills - 05 Marks
- Assessment of Speaking Skills - 05 Marks
- Project Work - 10 Marks

Note: -

- **All the syllabus should be completed by December 13, 2024**
- **In Pre-Board/Annual Examination, questions will be asked from the entire syllabus.**

Revision of entire syllabus

Pre-Board/Annual Examination

For more information regarding the syllabus, see CBSE Syllabus Specifications 2024-25.
https://cbseacademic.nic.in/web_material/CurriculumMain25/SrSec/English_core_SrSec_2024-25.pdf

ANNUAL SYLLABUS (2024-25)
CLASS: 12, SUBJECT: ENGINEERING GRAPHICS (Code 046)

THEORY

Unit I: Isometric Projection of Solids

(i) Construction of isometric scale showing main divisions of 10mm and smaller divisions of 1 mm, also showing the leading angles. Drawing helping view/s such as triangles, pentagon, hexagon, etc., using isometric scale.

(ii) Isometric projection (drawn to isometric scale) of solids such as cube; regular prisms and pyramids (triangular, square, pentagonal, and hexagonal); cone; cylinder; sphere; hemisphere. The axis and the base side of the solid should be either perpendicular to HP / VP or parallel to HP and VP.

(iii) Combination of any two above mentioned solids keeping the base side parallel or perpendicular to HP/VP and placed centrally together (Axis of both the solids should not be given parallel to HP).

Note:

1. *Hidden* lines are not required in isometric projection.
2. *Indicate* the direction of viewing.

Unit II: Machine Drawing (as per SP46: 2003)

A. Drawing of machine parts

(i) Drawing to full size scale with instruments.

(Internal choice will be given between any two of the following).

Introduction of threads: Standard profiles of screw threads - Square, Knuckle, B.S.W., Metric (external and internal); Bolts – Square head, hexagonal head; Nuts – Square head, Hexagonal head; Plain washer, Combination of nut and bolt with or without washer for assembling two parts together.

(ii) Free-hand sketches

Conventional representation of external and internal threads; Types of studs – Plain stud, Square-neck stud, Collar stud; Screws (round-head, cheese-head, 90^0 flat counter sunk-head, hexagonal socket head and grub-screw); Types of rivets – Snap head, Pan head (without tapered neck), Flat head, 60^0 countersunk flat head.

Note:- The above mentioned syllabus should be completed by September 13, 2024.

Revision

Mid Term Examination

B. Assembly drawings and Dis-Assembly drawings

(Internal choice will be given between an Assembly drawing and a Dis-Assembly drawing).

1. Bearings
   - (i) Open-Bearing
   - (ii) Bush- Bearing
2. Rod-Joints
   - (i) Cotter-joints for round-rods (Sleeve and cotter joint)
   - (ii) Cotter-joints for square rods (Gib and cotter-joint)
3. Tie-rod and Pipe-joint
   - (i) Turnbuckle
   - (ii) Flange pipe joint

Note:

3. *In all Assembly drawings, half sectional front view will be asked. Side/End view or Top View/Plan will be drawn without section.*
4. *In all Dis-assembly drawings, only two orthographic views (one of the two views may be half in section or full in section) will be asked of any two parts only.*

5. *(a) In all sectional views, hidden lines/ edges are not to be shown.*
(b) In all full views, hidden lines/edges are to be shown.

Note: -

- **All the syllabus should be completed by December 13, 2024.**
- **In Pre-Board/Annual Examination, questions will be asked from the entire.**

Revision of entire syllabus
Pre-Board/Annual Examination

PRACTICALS

(i) To perform the following tasks (for One only) from the given views of the prescribed fifteen (15) machine blocks in **ANNEXURE-I**.

Value-Points

1. Copy the given views 1
2. Drawing the missing view with hidden lines 2
3. Sketching the Isometric view without hidden edges 5
4. To make the machine block of the above in three dimensions.
(Not to scale but approximately proportionately drawn with any medium i.e., Soap-cake, plasticine, clay, wax, floral foam brick (available with florists), etc. 7

(ii) Computer Aided Design (CAD) – Project 10
Project file to be submitted on the simple solids or machine blocks as prescribed in part-I by using the CollabCAD software or any equivalent pertinent software.

(iii) (a) Sessional work relating to machine blocks as prescribed. 3
(b) Viva-voce based on part-I and part-II 2

Total Marks 30

ACTIVITY

Industrial Visits (Two) to any industry/ manufacturing plant to acquaint the students with the present - day methods & technology for better conceptual understanding.

ANNEXURE -- 1

1

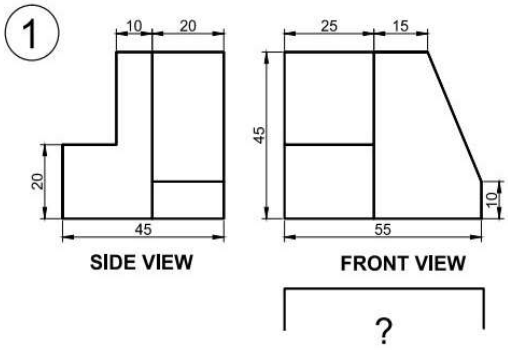

2

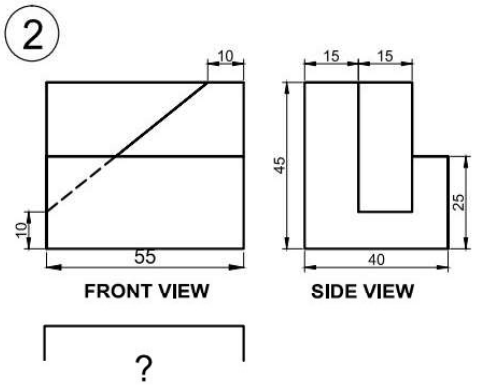

3

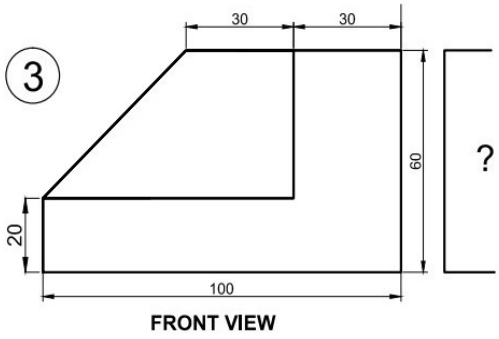

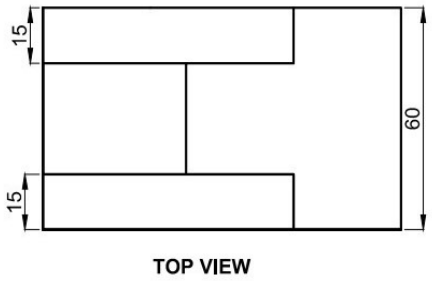

4

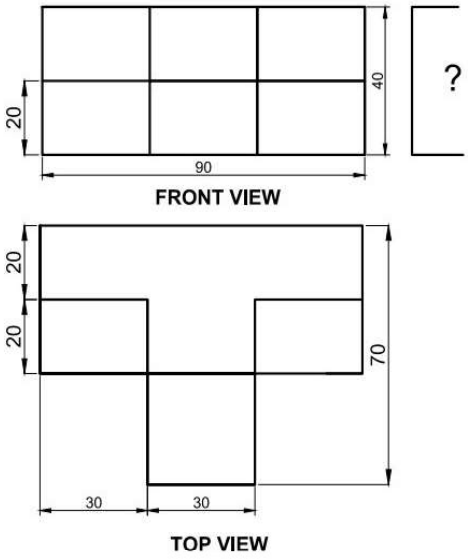

5

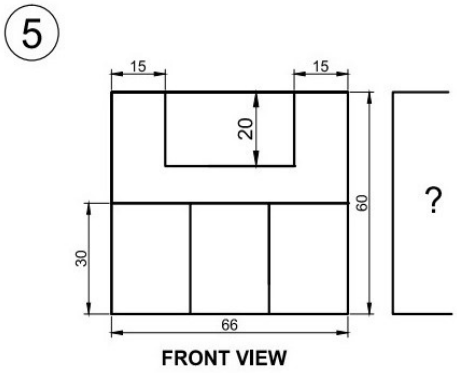

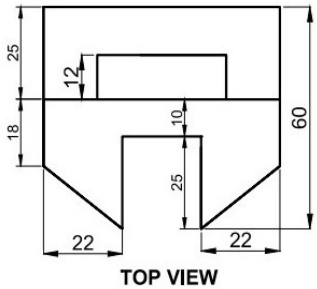

6

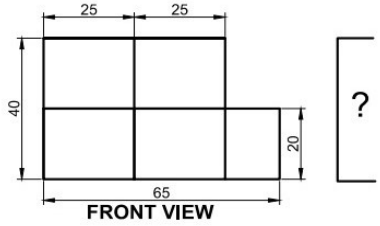

FRONT VIEW

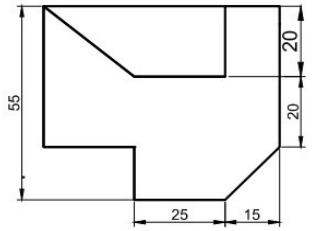

TOP VIEW

8

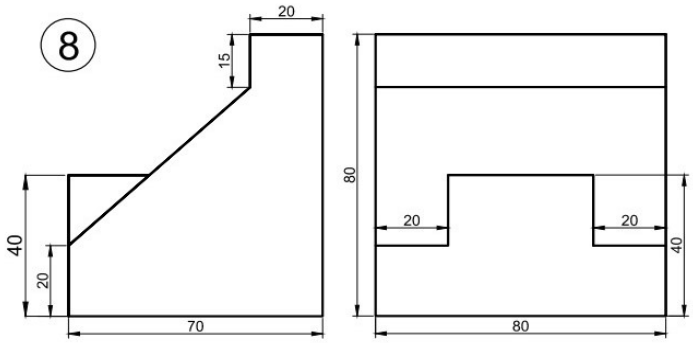

SIDE VIEW FRONT VIEW

9

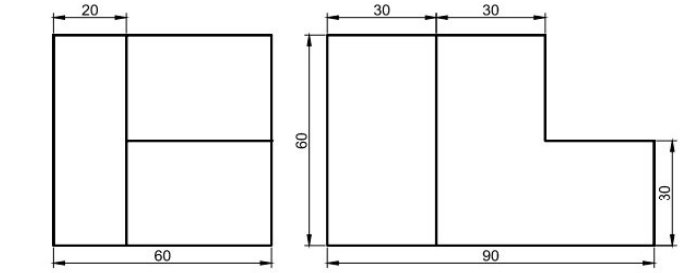

SIDE VIEW FRONT VIEW

7

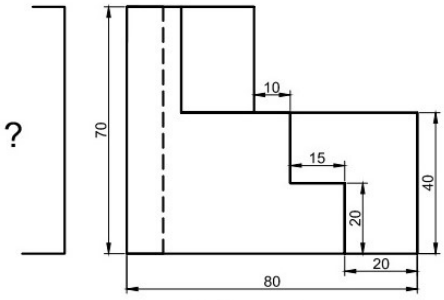

FRONT VIEW

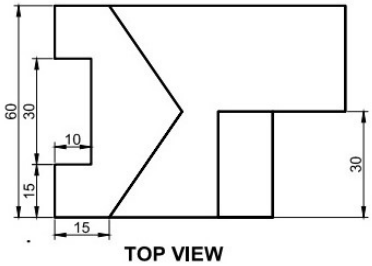

TOP VIEW

10

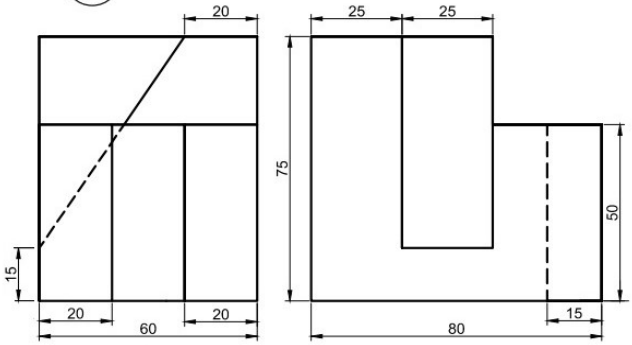

SIDE VIEW FRONT VIEW

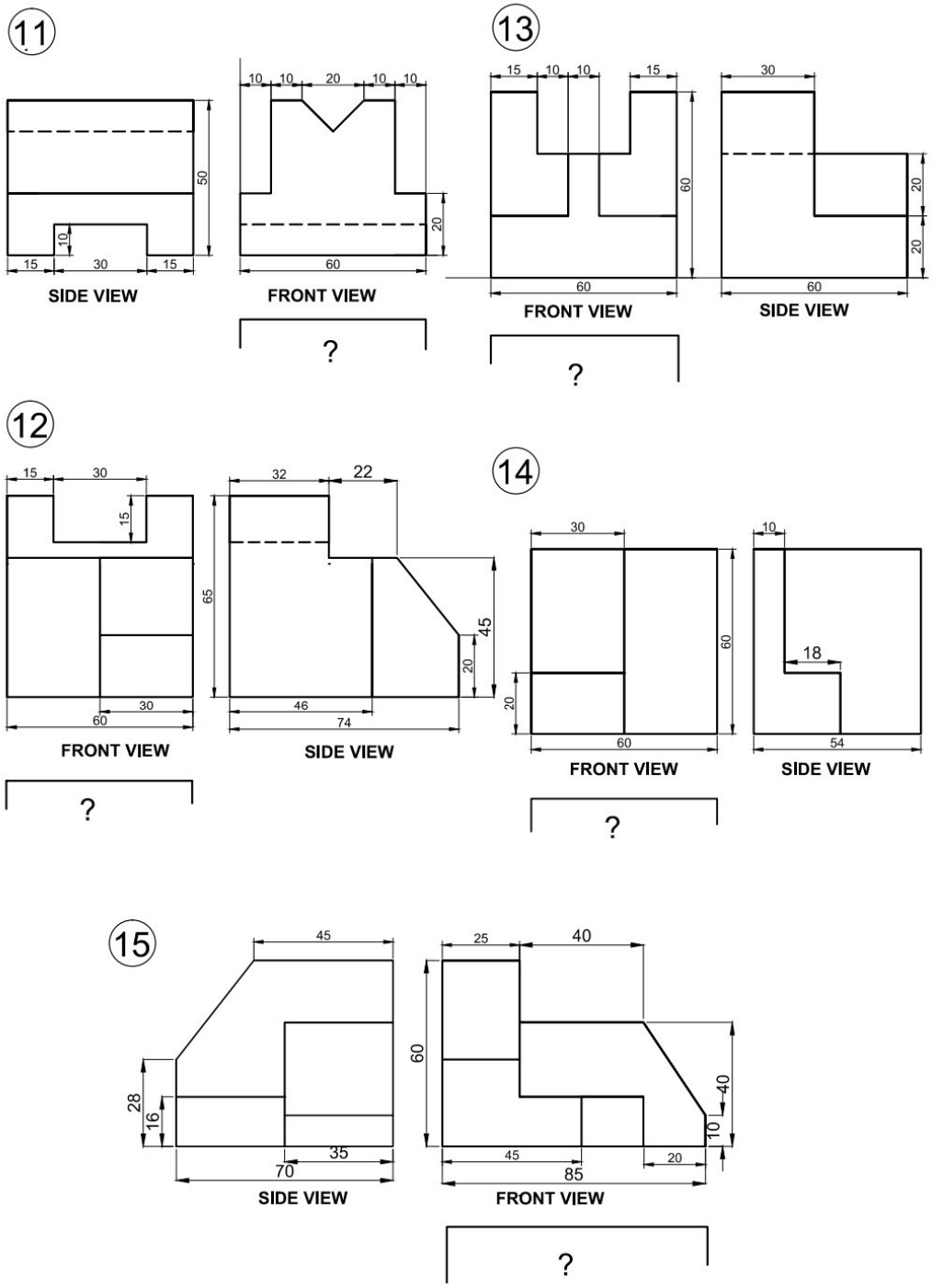

For more information regarding the syllabus, see CBSE Syllabus Specifications 2024-25.